JEFFERSON COUNTY DRAINAGE DISTRICT NO. 6
Karen J. Stewart, MBA, Business Manager: Purchasing Agent

6550 Walden Rd., Beaumont, Texas 77707 Phone: 409-842-1818 Fax: 409-842-2729

IFB Number:	IFB 20-006/KJS
IFB Title:	Construction of a New Concrete Parking Lot for Jefferson County District No. 6
IFB Due:	2:00 PM, CST, Thursday, May 14, 2020
Addendum No.:	02
Issued (Date):	May 5, 2020

TO BIDDER: This Addendum is an integral part of the IFB package under consideration by you as a Bidder in connection with the subject matter herein identified. Jefferson County deems all sealed proposals to have been proffered in recognition and consideration of the entire IFB package – **including all addenda.** For purposes of clarification, **receipt of this present Addendum by a Bidder should be evidenced by returning it (signed) as part of the Bidder's sealed proposal.** If the Proposal has already been received by the Jefferson County Drainage District No 6 Purchasing Department, Bidder should return this addendum in a separate sealed envelope, clearly marked with the IFB Name, IFB Number, and Opening Date and Time, as stated above.

Reason for Issuance of this addendum: Revisions by Addendum 02 will replace original specifications where itemized below and shall be utilized when preparing and submitting bids on May 14, 2020.

1. **Legal Notice Cover Page, Center of Page**

Originally Specified

BID NAME:	**Construction of a New Concrete Parking Lot**
BID NO:	**IFB 20-006/KJS**
DUE DATE:	**2:00 PM, Thursday, May 7, 2020**
MAIL OR DELIVER TO:	**Jefferson County Drainage District No. 6 Purchasing Department 6550 Walden Rd. Beaumont, Texas 77707**

Revised by Addendum 02- BID DUE DATE EXTENSION

BID NAME:	**Construction of a New Concrete Parking Lot**
BID NO:	**IFB 20-006/KJS**
DUE DATE:	**2:00 PM, Thursday, May 14, 2020**
MAIL OR DELIVER TO:	**Jefferson County Drainage District No. 6 Purchasing Department 6550 Walden Rd. Beaumont, Texas 77707**

2. **Bid Bond Performance Bond Requirement:**

Originally Specified:
No mention of a Bid Bond or a Performance Bond was included in the original specifications.

Revised by Addendum 02:
The District shall require the bidder to furnish a bid security in the amount of (5%) of the total contract cost. The bid bond must be executed with a surety company authorized to do business in the State of Texas and approved by the Districts advisors. Within ten (10) days after the date of the signing of a contract, the bidder shall furnish a performance bond to the District for the full amount of the contract, if the contract exceeds one hundred thousand dollars ($100,000). If the contract is for one hundred thousand dollars ($100,000) or less, the District may provide that no money be paid to the contractor until completion and acceptance of the work or the fulfillment of the purchase obligation of the District.

3. **Plan Drawings page 47-64: Attached at the end of the document**

Originally Specified:

a. Sheet G-2	**– DELETED**
b. Sheet G-5	**– DELETED**
c. Sheet PKG-1	**– DELETED**
d. Sheet PKG-2	**– DELETED**
e. Sheet PKG-6	**– DELETED**

Revised by Addendum 02:

a. Sheet G-2	**– ADDED**
b. Sheet G-5	**– ADDED**
c. Sheet PKG-1	**– ADDED**
d. Sheet PKG-2	**– ADDED**
e. **Sheet PKG-6**	**– ADDED**

4. **Bid Form Page 33 or 46**
Originally Specified
Original Bid Form –DELETED

Revised by Addendum 02 **– ADDED**

Revised by Addendum 02
Bid Form Base Bid

REVISED ADDENDUM 02 Base Bid Items						
Item No.	**Item Code**	**Description**	**Unit**	**Quantity**	**Unit Price**	**Total**
100	6001	Prep Right-of-Way *ADDENDUM NO.02*	LS	1	$	$
132	6001	Embankment (Final)(Ord. Comp.)(2'-Around Perimeter of Pavement)	CY	109	$	$
162	6001	Sodding for Ersion Control (Limit 2'-Around Perimeter of Pavement)	SY	325	$	$
168	6001	Vegetative Watering	MG	1	$	$
247	6233	Flex Base (8") (Ty-D) (Gr-2) (DC) (Comp. In Place) (Base Course)	SY	60	$	$
247	6234	Flex Base (2") (Level-up to Grade) *ADDENDUM NO.02*	TON	423	$	$
360	6001	Concrete Pavement (8"-Class P)(Parking Lot)	SY	5,234	$	$
360	6001	Concrete Pavement (8"-Class P)(Driveway)	SY	909	$	$
360	6001	Concrete Pavement (6"-Class P)(ADA Sidewalk at 2%)*ADDENDUM NO.02*	SY	54	$	$
500	6001	Mobilization (Not to Exceed 3%)	LS	1	$	$
529	6001	Concrete Curb (Ty-II) (6"-Class A) Pavement Perimeter	LF	1,184	$	$
529	6001	Concrete Curb (Ty-II) (6"-Class A) Medians	LF	771	$	$

*Vendor shall include the expected scheduled date to begin work

***Delivery Time**_____

Revised by Addendum 02
Bid Form Alternate Bid

REVISED ADDENDUM 02 AlternateBid Items						
Item No.	Item Code	Description	Unit	Estimated Quantity	Unit Price	Total
City of Beaumont R.O.W.						
100	6001	Prep Right-of-Way (Not to exceed $5,000)	LS	1	$	$
104	6022	Remove Concrete (Curb and Gutter Base & Subgrade)	LF	464	$	$
247	6233	Flex Base (8") (Ty-D) (Gr-2) (DC) (Comp. In Place) (Base Course)	SY	60	$	$
360	6001	Concrete Pavement (10"-Class P)(Arterial Road)	SY	457.5	$	$
360	6001	Concrete Pavement (8"-Class P)(Access Driveway)	SY	60	$	$
465	999	Junction Boxes Manholes and Inlets (Class C) (5') (Complete)	EA	1	$	$
496	6002	Remove Structure (Junction Box,Manholes or Inlets)	EA	1	$	$
502	6001	Barricades, Signs & Traffic Handling	EA	1.0	$	$
506	6001	Construction Entrance (Install)	EA	1.0	$	$
506	6002	Construction Entrance (Remove)	EA	1.0	$	$
506	6003	Erosion Control-Silt Fence/Gutter Buddies/Ersion Control Logs	LS	1.0	$	$
529	6001	Concrete Curb (Ty-II) (Class A)	LF	254	$	$
666	6005	Refl Pav Mrk TY I (W) 8" (Sld)(100Mil)	LF	100	$	$
666	6241	Pavement Sealer (Item 666-6005)	LF	100	$	$
678	6005	Pavement Surface Prep (Item 666-6005) *ADDENDUM NO.02*	LF	100	$	$

Revised by Addendum 02
Bid Form Alternate Bid
Parking Lot Striping

REVISED ADDENDUM 02 DD6-Parking Lot Striping						
636	6001	Aluminum Handicap Sign w/Pole (Comp. In Place)	EA	4	$	$
666	6001	Refl Pav Mrk TY I (Y) 4" (Sld)(100Mil)	LF	2,260	$	$
666	6241	Pavement Sealer (Item 666-6001)	LF	2,260	$	$
678	6001	Pavement Surface Prep (Item 666-6001)	LF	2,260	$	$
666	6002	Refl Pav Mrk TY I (W) 12" (Sld)(100Mil)	LF	28	$	$
666	6241	Pavement Sealer (Item 666-6002)	LF	28	$	$
678	6002	Pavement Surface Prep (Item 666-6002)	LF	28	$	$
666	6003	Refl Pav Mrk TY I (W) 12" (Sld)(100Mil)	EA	4	$	$
666	6241	Pavement Sealer (Item 666-6003)	EA	4	$	$
678	6003	Pavement Surface Prep (Item 666-6003)	EA	4	$	$
666	6004	Refl Pav Mrk TY I (Y) (Med Nose)(100Mil)	EA	6	$	$
666	6241	Pavement Sealer (Item 666-6004)	EA	6	$	$
678	6003	Pavement Surface Prep (Item 666-6004)	EA	6	$	$
666	6006	Fire Lane (6"-Red) (Prefab) *ADDENDUM NO.02*	LF	3,000	$	$
666	6241	Pavement Sealer (Item 666-6006) *ADDENDUM NO.02*	LF	3,000	$	$
678	6003	Pavement Surface Prep (Item 666-6006) *ADDENDUM NO.02*	LF	3,000	$	$
666	6007	Handicap Symbol (W) (Prefab) *ADDENDUM NO.02*	EA	4	$	$
666	6001	Pavement Sealer (Item 666-6007) *ADDENDUM NO.02*	EA	4	$	$
666	6241	Pavement Surface Prep (Item 666-6007) *ADDENDUM NO.02*	EA	4	$	$
666	6008	Handicap Access Aisle (6"-Blue) (100Mil) *ADDENDUM NO.02*	LF	256	$	$
666	6001	Pavement Sealer (Item 666-6008) *ADDENDUM NO.02*	LF	256	$	$
666	6241	Pavement Surface Prep (Item 666-6008) *ADDENDUM NO.02*	LF	256	$	$
999	6001	Wheel Stops (Concrete) *ADDENDUM NO.02*	EA	30	$	$

Acknowledgment of Addenda (if any):

Addendum 1	_____	Date Received_____
Addendum 2	_____	Date Received_____
Addendum 3	_____	Date Received_____

5. **Barricade and Construction General Notes and Requirements**

Originally Specified:
No reference document was included in the original specifications.

Revised by Addendum 02: Attached at the end of the document
Tx Dot Barricade and Construction General Notes and Requirements.

INDEX OF SHEETS

GENERAL

SHEET NO.	DESCRIPTION
G-1	TITLE SHEET
G-2	INDEX OF SHEETS
G-3 to G-4	GENERAL NOTES AND SPECIFICATIONS
G5	ESTIMATE & QUANTITIES

TRAFFIC CONTROL

SHEET NO.	DESCRIPTION
*TCP-(2-5)-18	*TRAFFIC CONTROL PLAN LONG TERM LANE CLOSURES MULTILANE CONVENTIONAL RDS.

NOTE:
SEE SPECIFICATIONS BOOK FOR BARRICADE AND CONSTRUCTION GENERAL NOTES AND REQUIREMENTS.

* STANDARD SHEETS SPECIFICALLY IDENTIFIED ABOVE HAVE BEEN ISSUED BY ME AND ARE APPLICABLE TO THIS PROJECT.

PARKING LOT DETAILS

SHEET NO.	DESCRIPTION
PKG-1	PROPOSED PARKING LOT PLAN & PROFILE
PKG-2	PROPOSED PARKING LOT JOINT & STRIPING LAYOUT
PKG-3	PROPOSED DRIVEWAY PLAN & PROFILE
PKG-4	PROPOSED ACCESS DRIVEWAY
PKG-5	PROPOSED WALDEN ROAD MODIFICATIONS
PKG-6	PROPOSED WALDEN ROAD JOINT REINFORCED CONCRETE PAVEMENT DETAILS

ENVIRONMENTAL

SHEET NO.	DESCRIPTION
EC-1	SWPPP AND FINAL GRADING PLAN
EC(1)-16	*TEMPORARY EROSION, SEDIMENT AND WATER POLLUTION CONTROL MEASURES - SILT FENCE
EC(3)-16	*TEMPORARY EROSION, SEDIMENT AND WATER POLLUTION CONTROL MEASURES - CONSTRUCTION EXITS
EC(9)-16-1 to 3	*TEMPORARY EROSION, SEDIMENT AND WATER POLLUTION CONTROL MEASURES - EROSION CONTROL LOGS

ADDENDUM NO.02

DD6 SHALL SUPPLY DUMP TRUCK AND DRIVER TO HAUL HEAVY MATERIALS FROM CONSTRUCTION ACTIVITIES. (CONCRETE WASHOUT, DEMO DEBRIS, FORM BOARDS, ETC.)

Doug Canant 5/6/20

APPROVED BY: DATE
DOUG S. CANANT, P.E. No.71285, R.P.L.S.
DISTRICT ENGINEER

STATE OF TEXAS
DOUG S. CANANT, JR.
71285
REGISTERED PROFESSIONAL ENGINEER

ADDENDUM NO.02

JEFFERSON COUNTY
DRAINAGE DISTRICT No.6
6550 WALDEN ROAD
BEAUMONT, TEXAS 77707

PROPOSED DD6 PARKING LOT

INDEX OF SHEETS

OWNERSHIP OF DOCUMENTS
This document, and the ideas and designs incorporated herein, as an instrument of the professional service, is the property of Jefferson County Drainage District No. 6, and is not to be used in whole or part, for any other project without the written authorization of Jefferson County Drainage District No. 6.

SHEET NO.: G-2

Base Bid Items

Item No.	Item Code	Description	Unit	Total
100	6001	Prep Right-of-Way *ADDENDUM NO.02*	LS	1
132	6001	Embankment (Final)(Ord. Comp.)(2'-Around Perimeter of Pavement)	CY	109
162	6001	Sodding for Ersion Control (Limit 2'-Around Perimeter of Pavement)	SY	325
168	6001	Vegetative Watering	MG	1
247	6233	Flex Base (8") (Ty-D) (Gr-2) (DC) (Comp. In Place) (Base Course)	SY	60
247	6234	Flex Base (2") (Level-up to Grade) *ADDENDUM NO.02*	TON	423
360	6001	Concrete Pavement (8"-Class P)(Parking Lot)	SY	5,234
360	6001	Concrete Pavement (8"-Class P)(Driveway)	SY	909
360	6001	Concrete Pavement (6"-Class P)(ADA Sidewalk at 2%)*ADDENDUM NO.02*	SY	54
500	6001	Mobilization (Not to Exceed 3%)	LS	1
529	6001	Concrete Curb (Ty-II) (6"-Class A) Pavement Perimeter	LF	1,184
529	6001	Concrete Curb (Ty-II) (6"-Class A) Medians	LF	771

AlternateBid Items

Item No.	Item Code	Description	Unit	Estimated Quantity
		City of Beaumont R.O.W.		
100	6001	Prep Right-of-Way (Not to exceed $5,000)	LS	1
104	6022	Remove Concrete (Curb and Gutter Base & Subgrade)	LF	464
247	6233	Flex Base (8") (Ty-D) (Gr-2) (DC) (Comp. In Place) (Base Course)	SY	60
360	6001	Concrete Pavement (10"-Class P)(Arterial Road)	SY	457.5
360	6001	Concrete Pavement (8"-Class P)(Access Driveway)	SY	60
465	999	Junction Boxes Manholes and Inlets (Class C) (5') (Complete)	EA	1
496	6002	Remove Structure (Junction Box,Manholes or Inlets)	EA	1
502	6001	Barricades, Signs & Traffic Handling	EA	1.0
506	6001	Construction Entrance (Install)	EA	1.0
506	6002	Construction Entrance (Remove)	EA	1.0
506	6003	Erosion Control-Silt Fence/Gutter Buddies/Ersion Control Logs	LS	1.0
529	6001	Concrete Curb (Ty-II) (Class A)	LF	254
666	6005	Refl Pav Mrk TY I (W) 8" (Sld)(100Mil)	LF	100
666	6241	Pavement Sealer (Item 666-6005)	LF	100
678	6005	Pavement Surface Prep (Item 666-6005) *ADDENDUM NO.02*	LF	100
		DD6-Parking Lot Striping		
636	6001	Aluminum Handicap Sign w/Pole (Comp. In Place)	EA	4
666	6001	Refl Pav Mrk TY I (Y) 4" (Sld)(100Mil)	LF	2,260
666	6241	Pavement Sealer (Item 666-6001)	LF	2,260
678	6001	Pavement Surface Prep (Item 666-6001)	LF	2,260
666	6002	Refl Pav Mrk TY I (W) 12" (Sld)(100Mil)	LF	28
666	6241	Pavement Sealer (Item 666-6002)	LF	28
678	6002	Pavement Surface Prep (Item 666-6002)	LF	28
666	6003	Refl Pav Mrk TY I (W) 12" (Sld)(100Mil)	EA	4
666	6241	Pavement Sealer (Item 666-6003)	EA	4
678	6003	Pavement Surface Prep (Item 666-6003)	EA	4
666	6004	Refl Pav Mrk TY I (Y) (Med Nose)(100Mil)	EA	6
666	6241	Pavement Sealer (Item 666-6004)	EA	6
678	6003	Pavement Surface Prep (Item 666-6004)	EA	6
666	6006	Fire Lane (6"-Red) (Prefab) *ADDENDUM NO.02*	LF	3,000
666	6241	Pavement Sealer (Item 666-6006) *ADDENDUM NO.02*	LF	3,000
678	6003	Pavement Surface Prep (Item 666-6006) *ADDENDUM NO.02*	LF	3,000
666	6007	Handicap Symbol (W) (Prefab) *ADDENDUM NO.02*	EA	4
666	6001	Pavement Sealer (Item 666-6007) *ADDENDUM NO.02*	EA	4
666	6241	Pavement Surface Prep (Item 666-6007) *ADDENDUM NO.02*	EA	4
666	6008	Handicap Access Aisle (6"-Blue) (100Mil) *ADDENDUM NO.02*	LF	256
666	6001	Pavement Sealer (Item 666-6008) *ADDENDUM NO.02*	LF	256
666	6241	Pavement Surface Prep (Item 666-6008) *ADDENDUM NO.02*	LF	256
999	6001	Wheel Stops (Concrete) *ADDENDUM NO.02*	EA	30

Doug Canant 5/6/20

APPROVED BY: DATE
DOUG S. CANANT, P.E. No.71285, R.P.L.S.
DISTRICT ENGINEER

STATE OF TEXAS
DOUG S. CANANT, JR.
71285
REGISTERED PROFESSIONAL ENGINEER

ADDENDUM NO.02

JEFFERSON COUNTY
DRAINAGE DISTRICT No.6
6550 WALDEN ROAD
BEAUMONT, TEXAS 77707

PROPOSED DD6 PARKING LOT

ESTIMATE & QUANTITIES

OWNERSHIP OF DOCUMENTS
This document, and the ideas and designs incorporated herein, as an instrument of the professional service, is the property of Jefferson County Drainage District No. 6, and is not to be used in whole or part, for any other project without the written authorization of Jefferson County Drainage District No. 6.

SHEET NO.: G-5

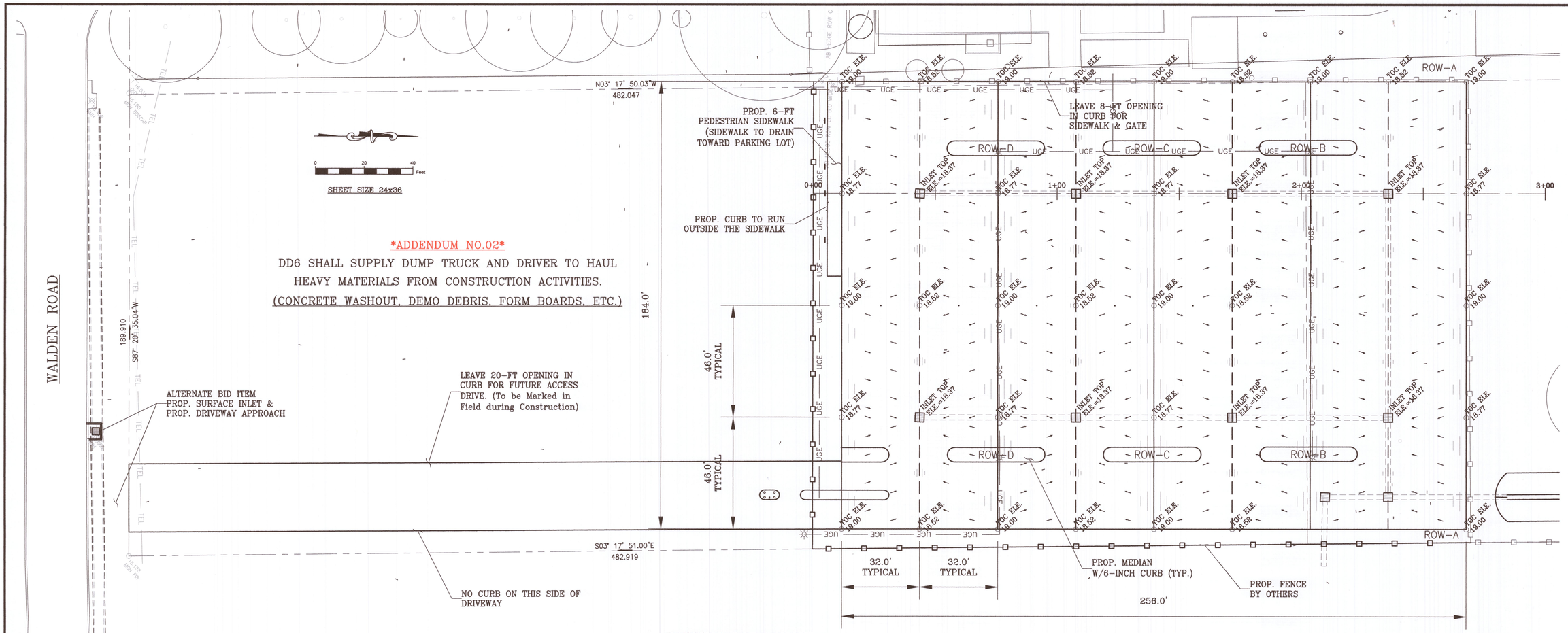

PARKING LOT LAYOUT

SCALE: 1:20

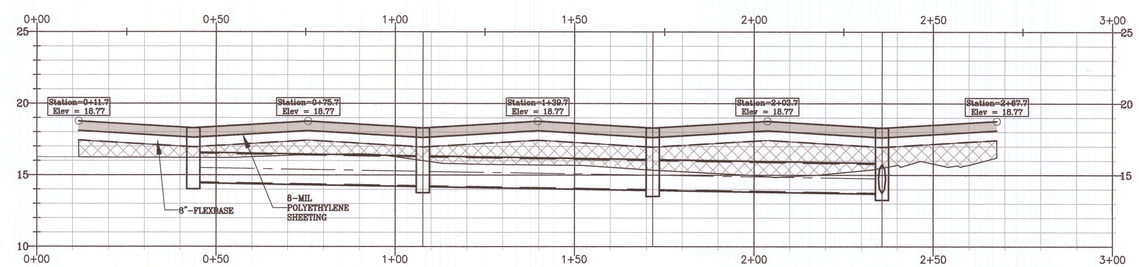

PROPOSED PAVEMENT PROFILE

H SCALE: 1:20

V SCALE: 1:5

SURVEY NOTES:

1. Elevations shall govern drawing.
2. Coordinate System used is State Plane Coordinate System (SPCS) in NAD 83 Datum.

ADDENDUM NO.02

SPECIFICATIONS: (2014 TxDOT Standard Specifications Manual)

Parking Lot Material = Class P-Concrete Pavement

Reinforcement = No.04 @ 12" O.C. each way

Parking Lot Dimensions = 184' x 256'

Parking Lot Longitudinal Slope = 1.5 %±

Parking Lot Lateral Slope = 0.5 %±

QUANTITY:

PROP. PARKING LOT = 5234 S.Y.

EXIST. BASE = 5332 S.Y.

ADDENDUM NO.02

QUANTITY:

PROP. BASE (186 x 258 x 0.16)ft = 295 C.Y.

Doug Canant 5/6/20

APPROVED BY: DATE

DOUG S. CANANT, P.E. No.71285, R.P.L.S.

DISTRICT ENGINEER

STATE OF TEXAS DOUG S. CANANT, JR. 71285 REGISTERED PROFESSIONAL ENGINEER

ADDENDUM NO.02

JEFFERSON COUNTY DRAINAGE DISTRICT No.6
6550 WALDEN ROAD
BEAUMONT, TEXAS 77707

PROPOSED DD6 PARKING LOT

PROPOSED PARKING LOT PLAN & PROFILE

OWNERSHIP OF DOCUMENTS
This document, and the ideas and designs incorporated herein, as an instrument of the professional service, is the property of Jefferson County Drainage District No. 6, and is not to be used in whole or part, for any other project without the written authorization of Jefferson County Drainage District No. 6.

SHEET NO.: PKG-1

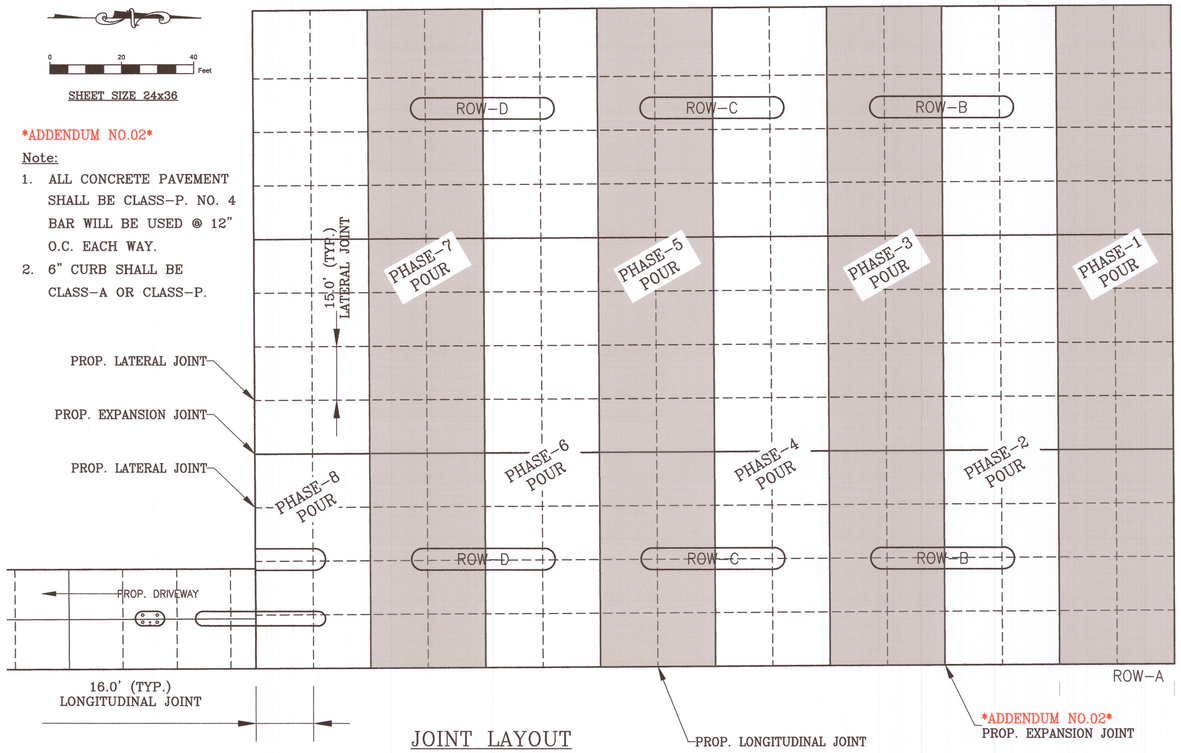

ADDENDUM NO.02

Note:

1. ALL CONCRETE PAVEMENT SHALL BE CLASS-P. NO. 4 BAR WILL BE USED @ 12" O.C. EACH WAY.
2. 6" CURB SHALL BE CLASS-A OR CLASS-P.

JOINT LAYOUT

Specification for:

1. Sika Greenstreak G-SEAL #610. Secure G-Seal to expansive board with staples, nails, screws, or adhesive to prevent dislocation during concrete placement. Use G-Seal as screed rail.
2. Expansion Board shall be ¾" minimum redwood.

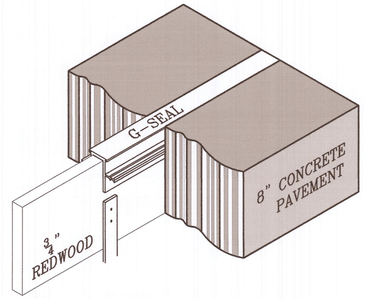

EXPANSIONJOINT

MATERIALS EXTRUDED FOR CLARITY

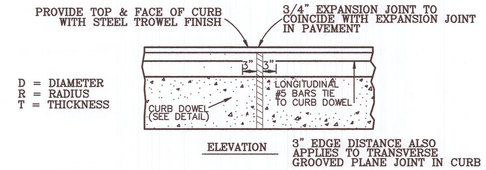

TYPICAL 6" CURB (DETAIL)

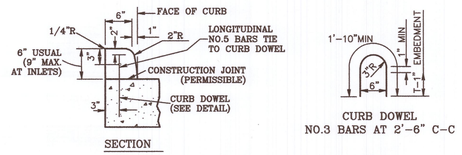

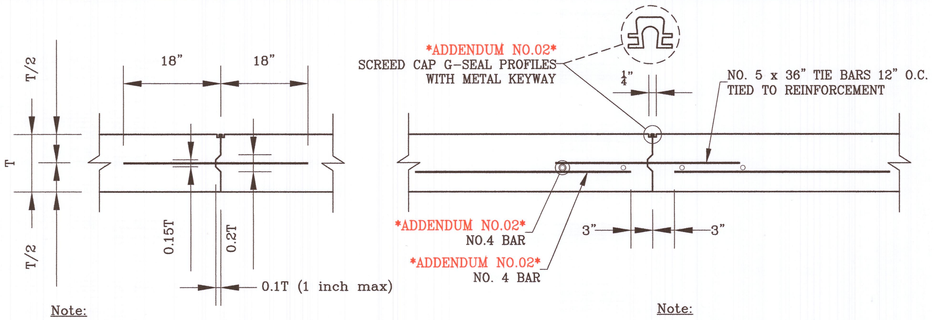

Note:

REINFORCEMENT REMOVED FOR CLARITY

Note:

LONGITUDINAL SPACING EVERY 16'

LONGITUDINAL KEYWAY JOINT DETAIL

NTS

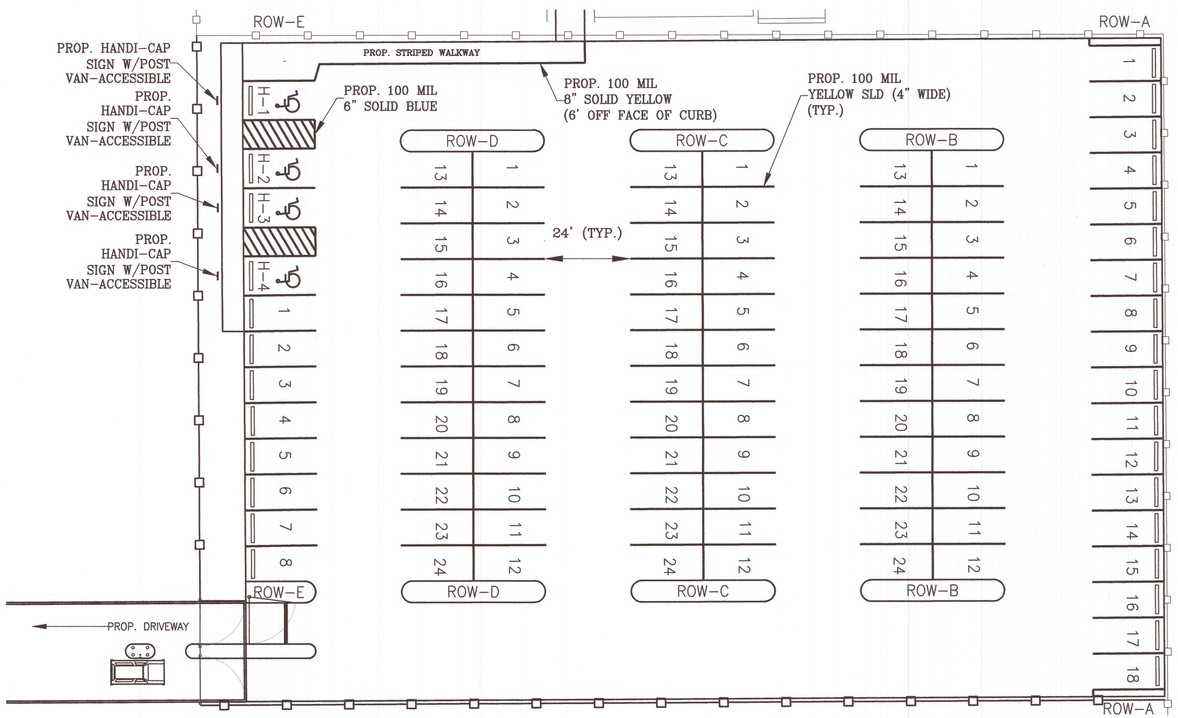

STRIPING LAYOUT

VAN ACCESSIBLE SIGNS

NTS

ADDENDUM NO.02

Note:

1. ALL HANDICAP PARKING IS 11-FT WIDE BY 20-FT DEEP.
2. H-1 & H-2 SHALL SHARE AN 8-FT ACCESS AISLE.
3. H-3 & H-4 SHALL SHARE AN 8-FT ACCESS AISLE.
4. 98-PARKING SPACES 10-FT WIDE BY 20-FT DEEP.

ADDENDUM NO.02

QTYS:

100 MIL SOLID(4"-YELLOW)
- ROW-A = 380-L.F.
- ROW-B = 560-L.F.
- ROW-C = 560-L.F.
- ROW-D = 560-L.F.
- ROW-E = 200-L.F.

100 MIL SOLID(6"-BLUE)
- ROW-E = 256-L.F.

CURB STOPS:
- ROW-A = 18 EA.
- ROW-E = 12 EA.

HANDICAP SYMBOL (WHITE)
- ROW-E = 4 EA.

Doug Canant 5/6/20

APPROVED BY:
DOUG S. CANANT, P.E. No.71285, R.P.L.S.
DISTRICT ENGINEER

DATE

STATE OF TEXAS
DOUG S. CANANT, JR.
71285
REGISTERED PROFESSIONAL ENGINEER

ADDENDUM NO.02

JEFFERSON COUNTY
DRAINAGE DISTRICT No.6
6550 WALDEN ROAD
BEAUMONT, TEXAS 77707

PROPOSED DD6 PARKING LOT

PROPOSED PARKING LOT
JOINT & STRIPING LAYOUT

OWNERSHIP OF DOCUMENTS
This document, and the ideas and designs incorporated herein, as an instrument of the professional service, is the property of Jefferson County Drainage District No. 6, and is not to be used in whole or part, for any other project without the written authorization of Jefferson County Drainage District No. 6.

SHEET NO.:
PKG-2

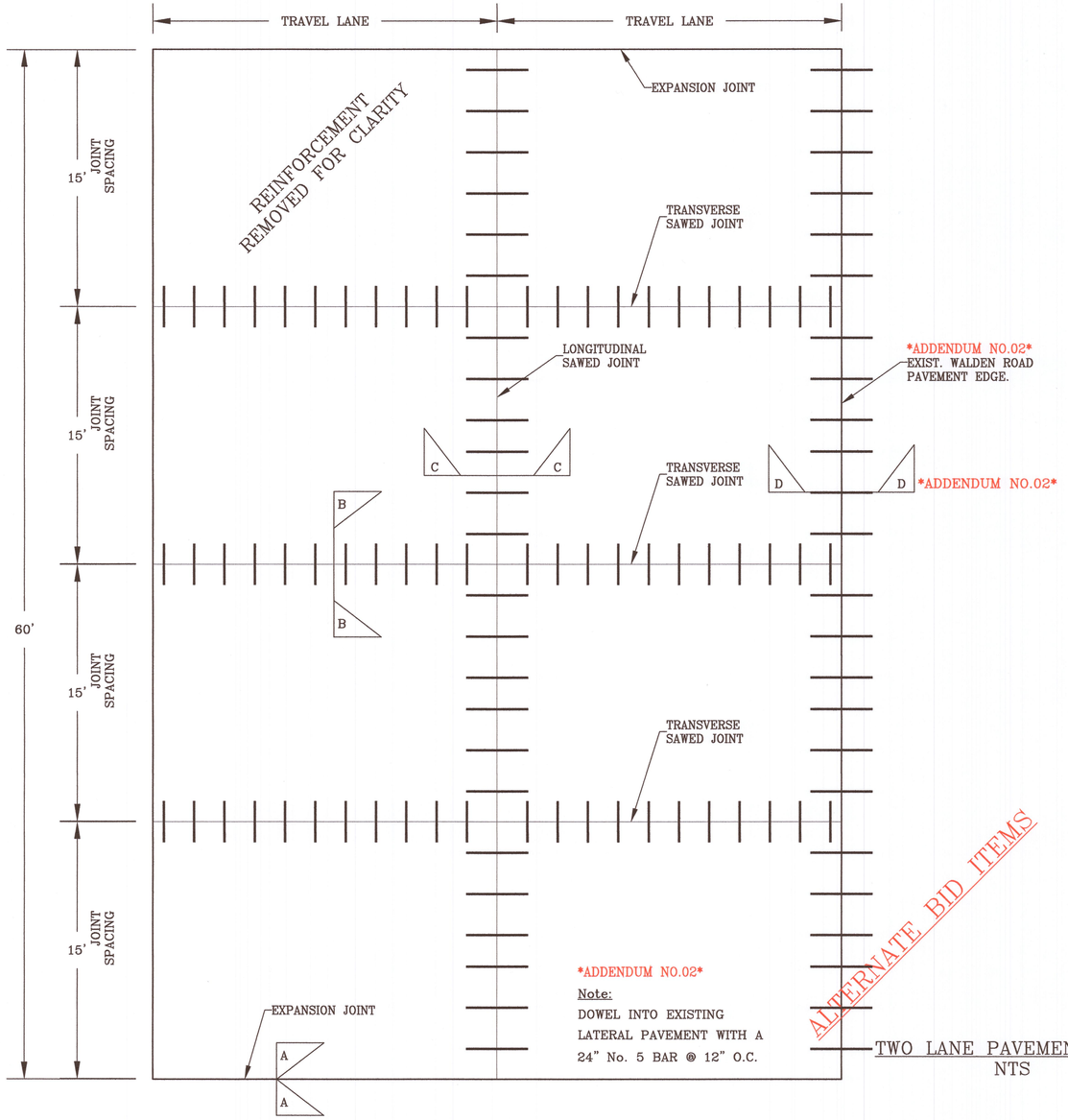

ADDENDUM NO.02

Note:

DOWEL INTO EXISTING LATERAL PAVEMENT WITH A 24" No. 5 BAR @ 12" O.C.

ALTERNATE BID ITEMS

TWO LANE PAVEMENT PLAN
NTS

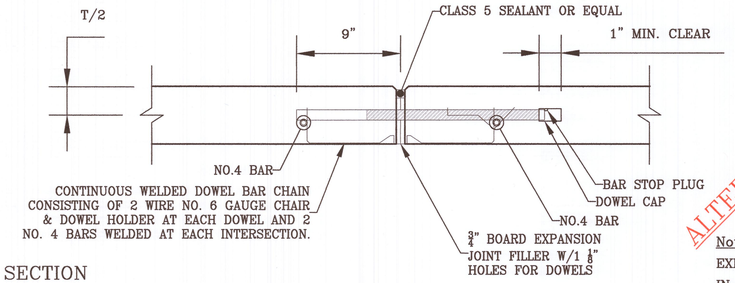

SECTION A–A

TRANSVERSE EXPANSION JOINT

ALTERNATE BID ITEMS

Note:

EXPANSION JOINT SHALL BE ANCHORED IN PLACE TO PREVENT MOVEMENT DURING PLACEMENT OF CONCRETE.

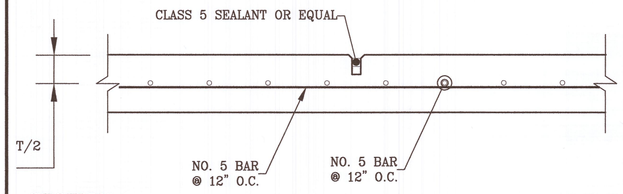

SECTION C–C

LONGITUDINAL SAWED CONTROL JOINT

ALTERNATE BID ITEMS

Note:

JOINT SPACING EVERY 12' TO 16'

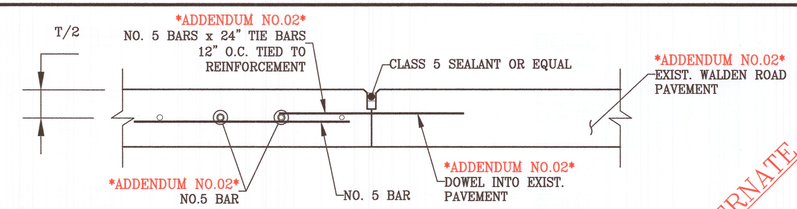

SECTION D–D

LONGITUDINAL CONSTRUCTION JOINT

ALTERNATE BID ITEMS

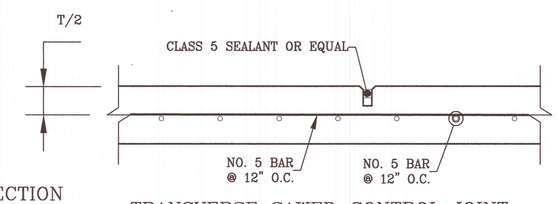

SECTION B–B

TRANSVERSE SAWED CONTROL JOINT

ALTERNATE BID ITEMS

REFERENCED TxDOT DRAWINGS:

JRCP – JOINT REINFORCED CONCRETE PAVEMENT DETAILS (PAVEMENT THICKNESS 10 INCHES OR LESS) and Curb detail

JS–14 – CONCRETE PAVING DETAILS JOINT SEALS

GENERAL NOTE FOR JOINT SEAL: Use TxDOT Standard JS–14 of Joint Seal details

1. UNLESS OTHERWISE SHOWN IN THE PLANS, EITHER METHOD "A" OR METHOD "B" MAY BE USED.
2. THE LOCATION OF JOINTS SHALL BE AS SHOWN ELSEWHERE IN THE PLANS.
3. THE JOINT RESERVOIR FOR SEALANT OR PCS SHALL BE SAWED UNLESS OTHERWISE SHOWN ON THE PLANS FOR THE LONGITUDINAL AND TRANSVERSE CONSTRUCTION JOINTS AND THE SAWED JOINTS.
4. DIMENSIONS d1, d2, AND d3 SHOWN IN METHOD A SHALL BE IN ACCORDANCE WITH THE PREFORMED COMPRESSION SEAL MANUFACTURER'S RECOMMENDATION.
5. REFER TO DMS–6310 "JOINT SEALANTS AND FILLERS" FOR THE CLASSIFICATIONS.
6. FOR SAWED LONGITUDINAL JOINT, LONGITUDINAL OR TRANSVERSE CONSTRUCTION JOINT, USE JOINT SEALANT CLASS 5 OR 8 UNLESS OTHERWISE SHOWN ON THE PLAN OR APPROVED.
7. FOR TRANSVERSE SAWED CONTRACTION, TRANSVERSE FORMED EXPANSION JOINT, AND ISOLATION JOINT USE JOINT SEALANT CLASS 5 OR 8 AT NEW JOINTS. USE JOINT SEALANT CLASS 4,5,7,OR 8 FOR MAINTAINING EXISTING JOINTS.
8. THE JOINTS SHALL BE CLEANED IN ACCORDANCE WITH THE ITEM 438 "CLEANING AND SEALING JOINTS" OR ITEM 713 "CLEANING AND SEALING JOINTS AND CRACKS (CONCRETE PAVEMENT)".
9. ISOLATION JOINTS ACCOMMODATE HORIZONTAL AND VERTICAL MOVEMENTS THAT OCCUR BETWEEN A PAVEMENT AND A STRUCTURE. ISOLATION JOINTS MAY BE USED FOR BRIDGE ABUTMENTS, INTERSECTIONS, CURB AND GUTTER, OLD AND NEW PAVEMENTS, OR AROUND DRAINAGE INLETS, MANHOLES, FOOTINGS AND LIGHTING STRUCTURES.

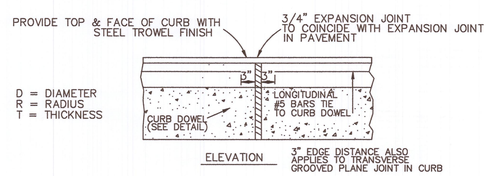

TYPICAL 6" CURB (DETAIL)

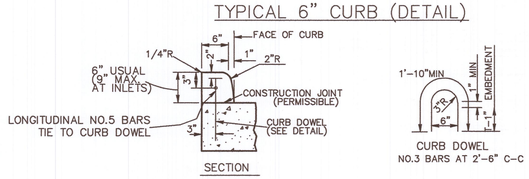

Doug Canant 5/6/20

APPROVED BY: DATE

DOUG S. CANANT, P.E. No.71285, R.P.L.S.

DISTRICT ENGINEER

STATE OF TEXAS
DOUG S. CANANT, JR.
71285
REGISTERED PROFESSIONAL ENGINEER

ADDENDUM NO.02

JEFFERSON COUNTY
DRAINAGE DISTRICT No.6
6550 WALDEN ROAD
BEAUMONT, TEXAS 77707

PROPOSED DD6 PARKING LOT

PROPOSED WALDEN ROAD
JOINT REINFORCED CONCRETE
PAVEMENT DETAILS

OWNERSHIP OF DOCUMENTS

This document, and the ideas and designs incorporated herein, as an instrument of the professional service, is the property of Jefferson County Drainage District No. 6, and is not to be used in whole or part, for any other project without the written authorization of Jefferson County Drainage District No. 6.

SHEET NO.: PKG–6

BARRICADE AND CONSTRUCTION (BC) STANDARD SHEETS GENERAL NOTES:

1. The Barricade and Construction Standard Sheets (BC sheets) are intended to show typical examples for placement of temporary traffic control devices, construction pavement markings, and typical work zone signs. The information contained in these sheets meet or exceed the requirements shown in the "Texas Manual on Uniform Traffic Control Devices" (TMUTCD).

2. The development and design of the Traffic Control Plan (TCP)is the responsibility of the Engineer.

3. The Contractor may propose changes to the TCP that are signed and sealed by a licensed professional engineer for approval. The Engineer may develop, sign and seal Contractor proposed changes.

4. The Contractor is responsible for installing and maintaining the traffic control devices as shown in the plans. The Contractor may not move or change the approximate location of any device without the approval of the Engineer.

5. Geometric design of lane shifts and detours should, when possible, meet the applicable design criteria contained in manuals such as the American Association of State Highway and Transportation Officials (AASHTO), "A Policy on Geometric Design of Highways and Streets," the TxDOT "Roadway Design Manual" or engineering judgment.

6. When projects abut, the Engineer(s) may omit the END ROAD WORK, TRAFFIC FINES DOUBLE, and other advance warning signs if the signing would be redundant and the work areas appear continuous to the motorists. If the adjacent project is completed first, the Contractor shall erect the necessary warning signs as shown on these sheets, the TCP sheets or as directed by the Engineer. The BEGIN ROAD WORK NEXT X MILES sign shall be revised to show appropriate work zone distance.

7. The Engineer may require duplicate warning signs on the median side of divided highways where median width will permit and traffic volumes justify the signing.

8. All signs shall be constructed in accordance with the details found in the "Standard Highway Sign Designs for Texas," latest edition. Sign details not shown in this manual shall be shown in the plans or the Engineer shall provide a detail to the Contractor before the sign is manufactured.

9. The temporary traffic control devices shown in the illustrations of the BC sheets are examples. As necessary, the Engineer will determine the most appropriate traffic control devices to be used.

10. As shown on BC(2), the OBEY WARNING SIGNS STATE LAW sign, STAY ALERT TALK OR TEXT LATER (see Sign Detail G20-10T) and the WORK ZONE TRAFFIC FINES DOUBLE sign with plaque shall be erected in advance of the CSJ limits. However, the TRAFFIC FINES DOUBLE sign will not be required on projects consisting solely of mobile operation work, such as striping or milling edgeline rumble strips. The BEGIN ROAD WORK NEXT X MILES, CONTRACTOR and END ROAD WORK signs shall be erected at or near the CSJ limits.

11. Except for devices required by Note 10, traffic control devices should be in place only while work is actually in progress or a definite need exists.

12. The Engineer has the final decision on the location of all traffic control devices.

13. Inactive equipment and work vehicles, including workers' private vehicles must be parked away from travel lanes. They should be as close to the right-of-way line as possible, or located behind a barrier or guardrail, or as approved by the Engineer.

WORKER SAFETY APPAREL NOTES:

1. Workers on foot who are exposed to traffic or to construction equipment within the right-of-way shall wear high-visibility safety apparel meeting the requirements of ISEA "American National Standard for High-Visibility Apparel," or equivalent revisions, and labeled as ANSI 107-2004 standard performance for Class 2 or 3 risk exposure. Class 3 garments should be considered for high traffic volume work areas or night time work.

DISCLAIMER:
The use of this standard is governed by the "Texas Engineering Practice Act". No warranty of any kind is made by TxDOT for any purpose whatsoever. TxDOT assumes no responsibility for the conversion of this standard to other formats or for incorrect results or damages resulting from its use.

Texas Department of Transportation

Traffic Operations Division Standard

BARRICADE AND CONSTRUCTION GENERAL NOTES AND REQUIREMENTS

BC(1)-14

FILE: bcsm-14.dgn	DN: TxDOT	CK: TxDOT	DW: TxDOT	CK: TxDOT
© TxDOT November 2002	CONT	SECT	JOB	HIGHWAY
REVISIONS 4-03 5-10 8-14 9-07 7-13	DIST	COUNTY 12		SHEET NO.

DATE:
FILE: Revised Addendum 02 Concrete Parking Lot

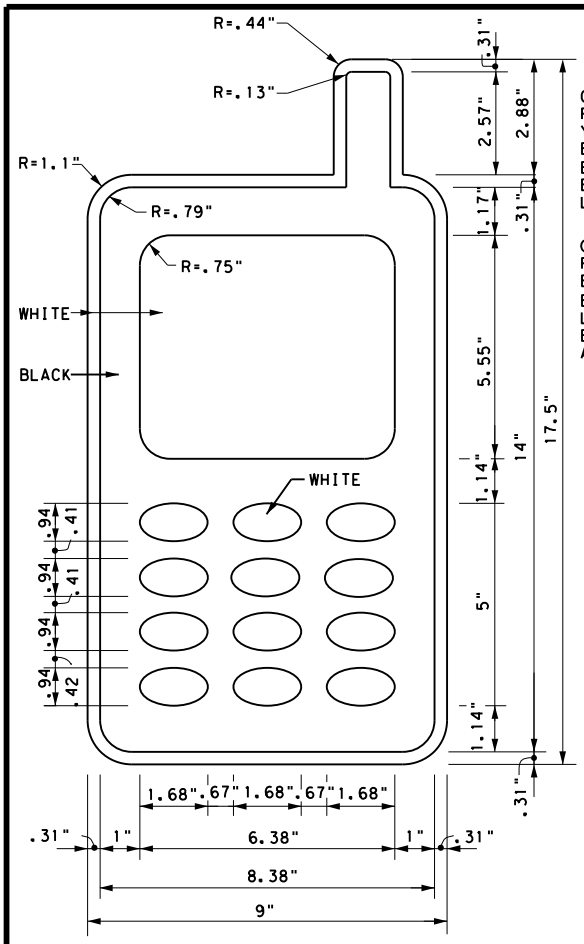

3.0" Radius, 1.25" Border, 0.75" Indent, Black on Yellow;
[STAY ALERT] Font: D
3.0" Radius, 1.25" Border, 0.75" Indent, Black on Orange;
[TALK OR TEXT LATER] Font: C specified length;

SIGN DETAIL (G20-10T)

THE DOCUMENTS BELOW CAN BE FOUND ON-LINE AT http://www.txdot.gov
COMPLIANT WORK ZONE TRAFFIC CONTROL DEVICES LIST (CWZTCD)
DEPARTMENTAL MATERIAL SPECIFICATIONS (DMS)
MATERIAL PRODUCER LIST (MPL)
ROADWAY DESIGN MANUAL - SEE "MANUALS (ONLINE MANUALS)"
STANDARD HIGHWAY SIGN DESIGNS FOR TEXAS (SHSD)
TEXAS MANUAL ON UNIFORM TRAFFIC CONTROL DEVICES (TMUTCD)
TRAFFIC ENGINEERING STANDARD SHEETS

Only pre-qualified products shall be used. The "Compliant Work Zone Traffic Control Devices List" (CWZTCD) describes pre-qualified products and their sources and may be found on-line at the web address given below or by contacting:

Texas Department of Transportation
Traffic Operations Division - TE
Phone (512) 416-3118

Texas Department of Transportation

Traffic Operations Division Standard

BARRICADE AND CONSTRUCTION GENERAL NOTES AND REQUIREMENTS

BC(1)-14

FILE: bcsm-14.dgn	DN: TxDOT	CK: TxDOT	DW: TxDOT	CK: TxDOT
© TxDOT November 2002	CONT	SECT	JOB	HIGHWAY
REVISIONS 4-03 5-10 8-14 9-07 7-13	DIST	COUNTY		SHEET NO.

DISCLAIMER:
The use of this standard is governed by the "Texas Engineering Practice Act". No warranty of any kind is made by TxDOT for any purpose whatsoever. TxDOT assumes no responsibility for the conversion of this standard to other formats or for incorrect results or damages resulting from its use.

DATE:
FILE: Revised Addendum 02 Concrete Parking Lot

DISCLAIMER:
The use of this standard is governed by the "Texas Engineering Practice Act". No warranty of any kind is made by TxDOT for any purpose whatsoever. TxDOT assumes no responsibility for the conversion of this standard to other formats or for incorrect results or damages resulting from its use.

DATE:
FILE:

Revised Addendum 02 Concrete Parking Lot

WORK AREAS IN MULTIPLE LOCATIONS WITHIN CSJ LIMITS

SAMPLE LAYOUT OF SIGNING FOR WORK BEGINNING AT THE CSJ LIMITS

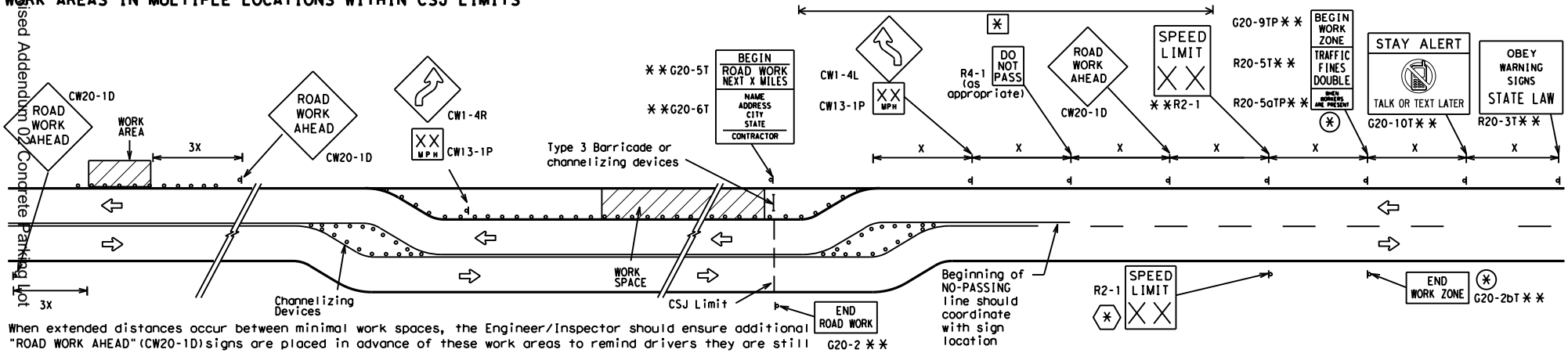

When extended distances occur between minimal work spaces, the Engineer/Inspector should ensure additional "ROAD WORK AHEAD"(CW20-1D)signs are placed in advance of these work areas to remind drivers they are still within the project limits. See the applicable TCP sheets for exact location and spacing of signs and channelizing devices.

LEGEND	
	Type 3 Barricade
	Channelizing Devices
	Sign
X	See Typical Construction Warning Sign Size and Spacing chart or the TMUTCD for sign spacing requirements.

SAMPLE LAYOUT OF SIGNING FOR WORK BEGINNING DOWNSTREAM OF THE CSJ LIMITS

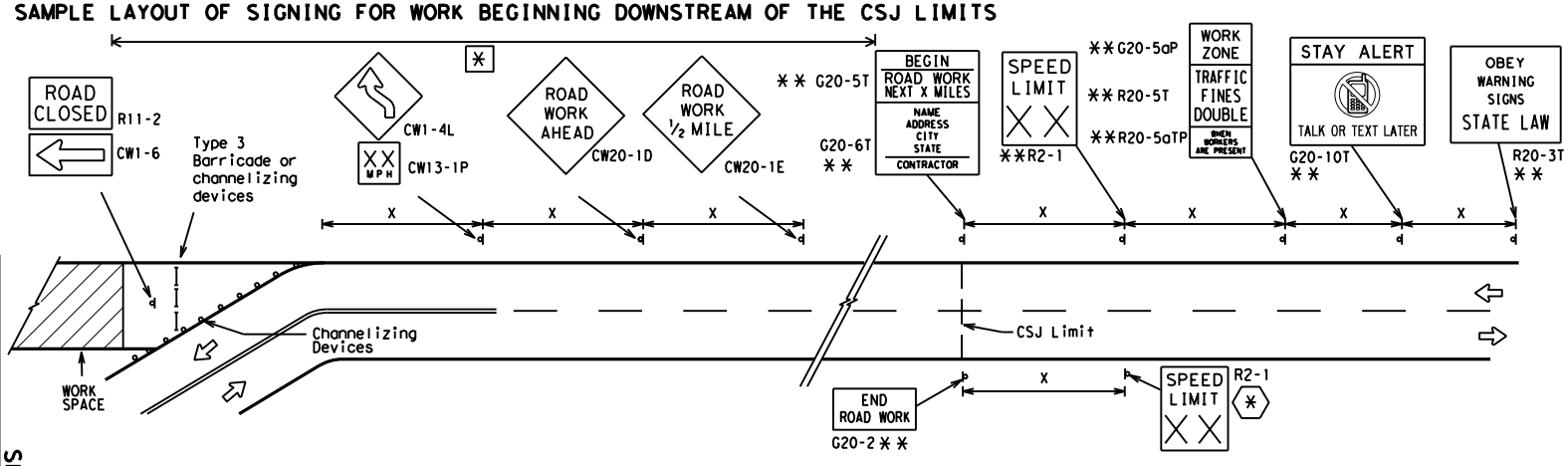

NOTES

The Contractor shall determine the appropriate distance to be placed on the G20-1 series signs and "BEGIN ROAD WORK NEXT X MILES"(G20-5T)sign for each specific project. This distance shall replace the "X" and shall be rounded to the nearest whole mile with the approval of the Engineer. No decimals shall be used.

(*) The "BEGIN WORK ZONE"(G20-9TP) and "END WORK ZONE" (G20-2bT) shall be used as shown on the sample layout when advance signs are required outside the CSJ Limits. They inform the motorist of entering or leaving a part of the work zone lying outside the CSJ Limits where traffic fines may double if workers are present.

** Required CSJ Limit signing. See Note 10 on BC(1). TRAFFIC FINES DOUBLE signs will not be required on projects consisting solely of mobile operations work.

[*] Area for placement of "ROAD WORK AHEAD" (CW20-1D)sign and other signs or devices as called for on the Traffic Control Plan.

(*) Contractor will install a regulatory speed limit sign at the end of the work zone.

SHEET 3 OF 29

Texas Department of Transportation

Traffic Operations Division Standard

BARRICADE AND CONSTRUCTION PROJECT LIMIT

BC(2)-14

FILE: bcsm-14.dgn	DN: TxDOT	CK: TxDOT	DW: TxDOT	CK: TxDOT
© TxDOT November 2002	CONT	SECT	JOB	HIGHWAY
REVISIONS 9-07 8-14 7-13	DIST		COUNTY 14	SHEET NO.

DISCLAIMER:
The use of this standard is governed by the "Texas Engineering Practice Act". No warranty of any kind is made by TxDOT for any purpose whatsoever. TxDOT assumes no responsibility for the conversion of this standard to other formats or for incorrect results or damages resulting from its use.

DATE:
FILE:

Revised Addendum 02 Concrete Parking Lot

T-INTERSECTION

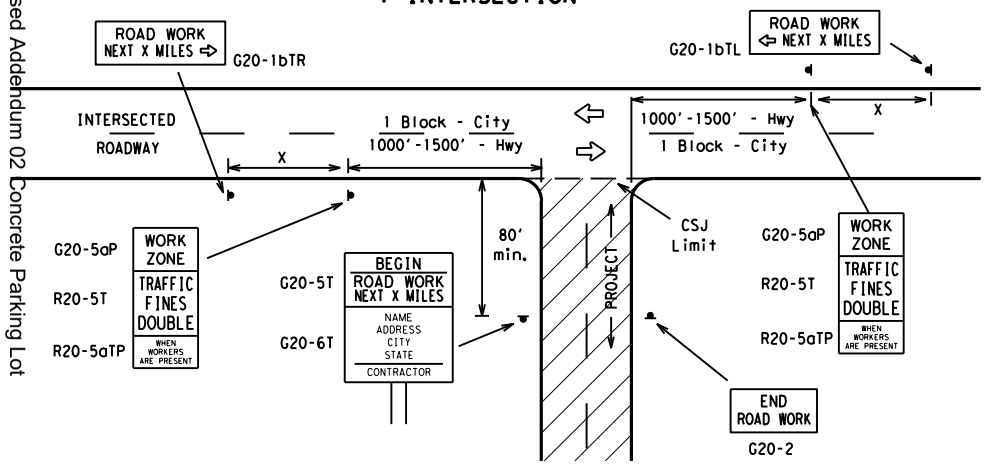

CSJ LIMITS AT T-INTERSECTION

1. The Engineer will determine the types and location of any additional traffic control devices, such as a flagger and accompanying signs, or other signs, that should be used when work is being performed at or near an intersection.

2. If construction closes the road at a T-intersection the Contractor shall place the "CONTRACTOR NAME"(G20-6T) sign behind the Type 3 Barricades for the road closure (see BC(10) also). The "ROAD WORK NEXT X MILES" left arrow(G20-1bTL) and "ROAD WORK NEXT X MILES" right arrow (G20-1bTR)" signs shall be replaced by the detour signing called for in the plans.

TYPICAL LOCATION OF CROSSROAD SIGNS

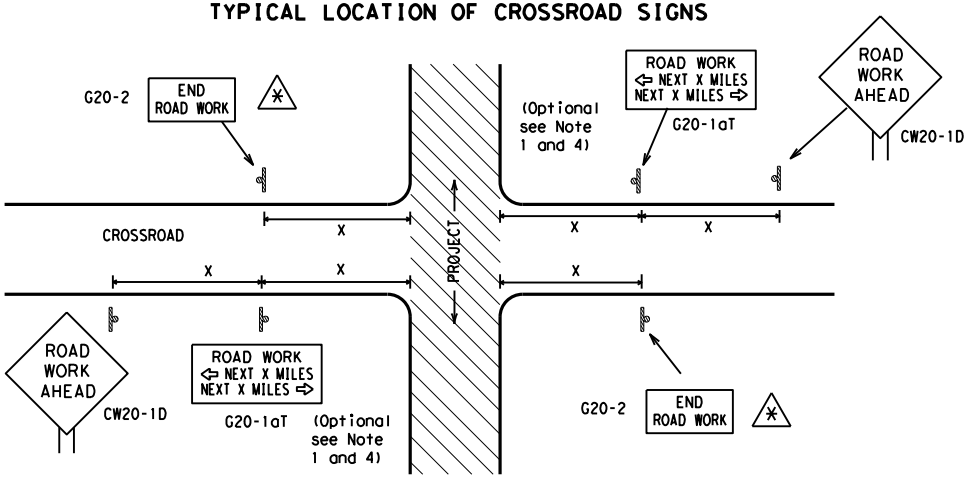

(*) May be mounted on back of "ROAD WORK AHEAD"(CW20-1D) sign with approval of Engineer. (See note 2 below)

1. The typical minimum signing on a crossroad approach should be a "ROAD WORK AHEAD" (CW20-1D)sign and a (G20-2) "END ROAD WORK" sign, unless noted otherwise in plans.

2. The Engineer may use the reduced size 36" x 36" ROAD WORK AHEAD (CW20-1D) sign mounted back to back with the reduced size 36" x 18" "END ROAD WORK"(G20-2) sign on low volume crossroads (see Note 4 under "Typical Construction Warning Sign Size and Spacing"). See the "Standard Highway Sign Designs for Texas" manual for sign details. The Engineer may omit the advance warning signs on low volume crossroads. The Engineer will determine whether a road is low volume. This information shall be shown in the plans.

3. Based on existing field conditions, the Engineer/Inspector may require additional signs such as FLAGGER AHEAD, LOOSE GRAVEL, or other appropriate signs. When additional signs are required, these signs will be considered part of the minimum requirements. The Engineer/Inspector will determine the proper location and spacing of any sign not shown on the BC sheets, Traffic Control Plan sheets or the Work Zone Standard Sheets.

4. The "ROAD WORK NEXT X MILES"(G20-1aT)sign shall be required at high volume crossroads to advise motorists of the length of construction in either direction from the intersection. The Engineer will determine whether a roadway is considered high volume.

5. Additional traffic control devices may be shown elsewhere in the plans for higher volume crossroads.

6. When work occurs in the intersection area, appropriate traffic control devices, as shown elsewhere in the plans or as determined by the Engineer/Inspector, shall be in place.

LEGEND	
⊢⊣	Type 3 Barricade
○ ○ ○	Channelizing Devices
▬	Sign
X	See Typical Construction Warning Sign Size and Spacing chart or the TMUTCD for sign spacing requirements.

Texas Department of Transportation

Traffic Operations Division Standard

SHEET 4 OF 29

BARRICADE AND CONSTRUCTION PROJECT LIMIT

BC(2)-14

FILE: bcsm-14.dgn	DN: TxDOT	CK: TxDOT	DW: TxDOT	CK: TxDOT
© TxDOT November 2002	CONT	SECT	JOB	HIGHWAY
REVISIONS 9-07 7-13 8-14	DIST	COUNTY 15	SHEET NO.

TYPICAL CONSTRUCTION WARNING SIGN SIZE AND SPACING [1,5,6]

SIZE

Sign Number or Series	Conventional Road	Expressway/ Freeway
CW20[4] CW21 CW22 CW23 CW25	48" x 48"	48" x 48"
CW1, CW2, CW7, CW8, CW9, CW11, CW14	36" x 36"	48" x 48"
CW3, CW4, CW5, CW6, CW8-3, CW10, CW12	48" x 48"	48" x 48"

SPACING

Posted Speed	Sign Spacing "X" Δ
MPH	Feet (Apprx.)
30	120
35	160
40	240
45	320
50	400
55	500[2]
60	600[2]
65	700[2]
70	800[2]
75	900[2]
80	1000[2]
*	*[3]

* For typical sign spacings on divided highways, expressways and freeways, see Part 6 of the "Texas Manual on Uniform Traffic Control Devices" (TMUTCD) typical application diagrams or TCP Standard Sheets.

Δ Minimum distance from work area to first Advance Warning sign nearest the work area and/or distance between each additional sign.

GENERAL NOTES

1. Special or larger size signs may be used as necessary.
2. Distance between signs should be increased as required to have 1500 feet advance warning.
3. Distance between signs should be increased as required to have 1/2 mile or more advance warning.
4. 36" x 36" "ROAD WORK AHEAD" (CW20-1D) signs may be used on low volume crossroads at the discretion of the Engineer. See Note 2 under "Typical Location of Crossroad Signs".
5. Only diamond shaped warning sign sizes are indicated.
6. See sign size listing in "TMUTCD", Sign Appendix or the "Standard Highway Sign Designs for Texas" manual for complete list of available sign design sizes.

DISCLAIMER:
The use of this standard is governed by the "Texas Engineering Practice Act". No warranty of any kind is made by TxDOT for any purpose whatsoever. TxDOT assumes no responsibility for the conversion of this standard to other formats or for incorrect results or damages resulting from its use.

Texas Department of Transportation

Traffic Operations Division Standard

BARRICADE AND CONSTRUCTION PROJECT LIMIT

BC(2)-14

FILE: bcsm-14.dgn	DN: TxDOT	CK: TxDOT	DW: TxDOT	CK: TxDOT
© TxDOT November 2002	CONT	SECT	JOB	HIGHWAY
REVISIONS 9-07 8-14 7-13	DIST	COUNTY		SHEET NO.

DATE:
FILE: Revised Addendum 02 Concrete Parking Lot

DISCLAIMER:
The use of this standard is governed by the "Texas Engineering Practice Act". No warranty of any kind is made by TxDOT for any purpose whatsoever. TxDOT assumes no responsibility for the conversion of this standard to other formats or for incorrect results or damages resulting from its use.

DATE:
FILE:

Revised Addendum 2 Concrete Parking Lot

TYPICAL APPLICATION OF WORK ZONE SPEED LIMIT SIGNS

Work zone speed limits shall be regulatory, established in accordance with the "Procedures for Establishing Speed Zones," and approved by the Texas Transportation Commission, or by City Ordinance when within Incorporated City Limits.

Reduced speeds should only be posted in the vicinity of work activity and not throughout the entire project.

Regulatory work zone speed signs (R2-1) shall be removed or covered during periods when they are not needed.

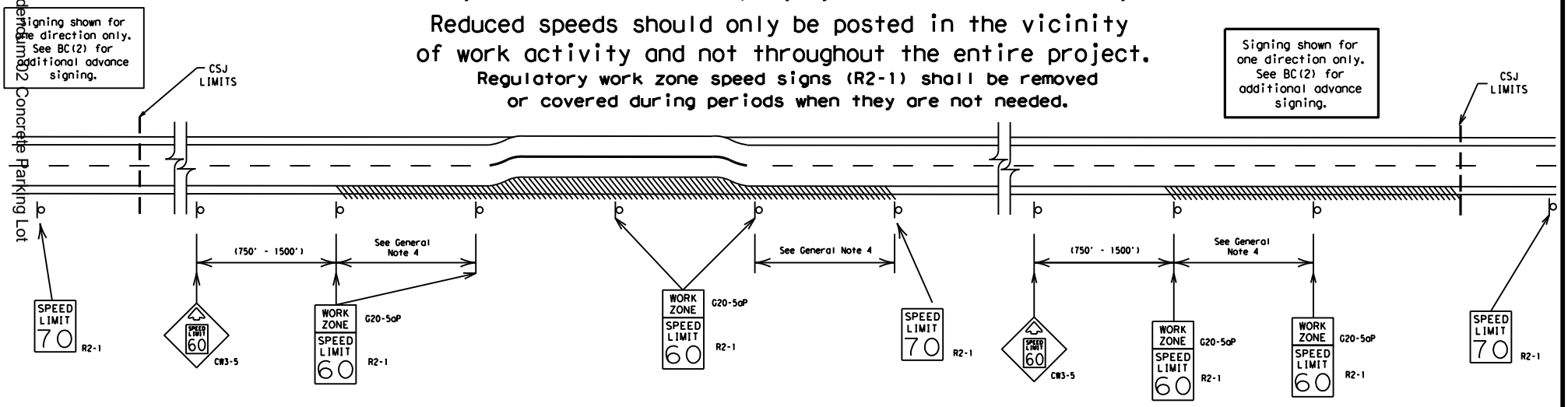

GUIDANCE FOR USE:

LONG/INTERMEDIATE TERM WORK ZONE SPEED LIMITS

This type of work zone speed limit should be included on the design of the traffic control plans when restricted geometrics with a lower design speed are present in the work zone and modification of the geometrics to a higher design speed is not feasible.

Long/Intermediate Term Work Zone Speed Limit signs, when approved as described above, should be posted and visible to the motorist when work activity is present. Work activity may also be defined as a change in the roadway that requires a reduced speed for motorists to safely negotiate the work area, including:

a) rough road or damaged pavement surface
b) substantial alteration of roadway geometrics (diversions)
c) construction detours
d) grade
e) width
f) other conditions readily apparent to the driver

As long as any of these conditions exist, the work zone speed limit signs should remain in place.

SHORT TERM WORK ZONE SPEED LIMITS

This type of work zone speed limit may be included on the design of the traffic control plans when workers or equipment are not behind concrete barrier, when work activity is within 10 feet of the traveled way or actually in the travelled way.

Short Term Work Zone Speed Limit signs should be posted and visible to the motorists only when work activity is present. When work activity is not present, signs shall be removed or covered.
(See Removing or Covering on BC(4)).

GENERAL NOTES

1. Regulatory work zone speed limits should be used only for sections of construction projects where speed control is of major importance.
2. Regulatory work zone speed limit signs shall be placed on supports at a 7 foot minimum mounting height.
3. Speed zone signs are illustrated for one direction of travel and are normally posted for each direction of travel.
4. Frequency of work zone speed limit signs should be:
   40 mph and greater 0.2 to 2 miles
   35 mph and less 0.2 to 1 mile
5. Regulatory speed limit signs shall have black legend and border on a white reflective background (See "Reflective Sheeting" on BC(4)).
6. Fabrication, erection and maintenance of the "ADVANCE SPEED LIMIT" (CW3-5) sign, "WORK ZONE" (G20-5aP) plaque and the "SPEED LIMIT" (R2-1) signs shall not be paid for directly, but shall be considered subsidiary to Item 502.
7. Turning signs from view, laying signs over or down will not be allowed, unless as otherwise noted under "REMOVING OR COVERING" on BC(4).
8. Techniques that may help reduce traffic speeds include but are not limited to:
   A. Law enforcement.
   B. Flagger stationed next to sign.
   C. Portable changeable message sign (PCMS).
   D. Low-power (drone) radar transmitter.
   E. Speed monitor trailers or signs.
9. Speeds shown on details above are for illustration only. Work Zone Speed Limits should only be posted as approved for each project.
10. For more specific guidance concerning the type of work, work zone conditions and factors impacting allowable regulatory construction speed zone reduction see TxDOT form #1204 in the TxDOT e-form system.

Texas Department of Transportation

Traffic Operations Division Standard

SHEET 6 OF 29

BARRICADE AND CONSTRUCTION WORK ZONE SPEED LIMIT

BC(3)-14

FILE:	bcsm-14.dgn	DN:	CK:
© TxDOT November 2002		CK:	DW:
REVISIONS		CONT	SECT
9-07	8-14	JOB	HIGHWAY
7-13		DIST	COUNTY 17
			SHEET NO.

TYPICAL MINIMUM CLEARANCES FOR LONG TERM AND INTERMEDIATE TERM SIGNS

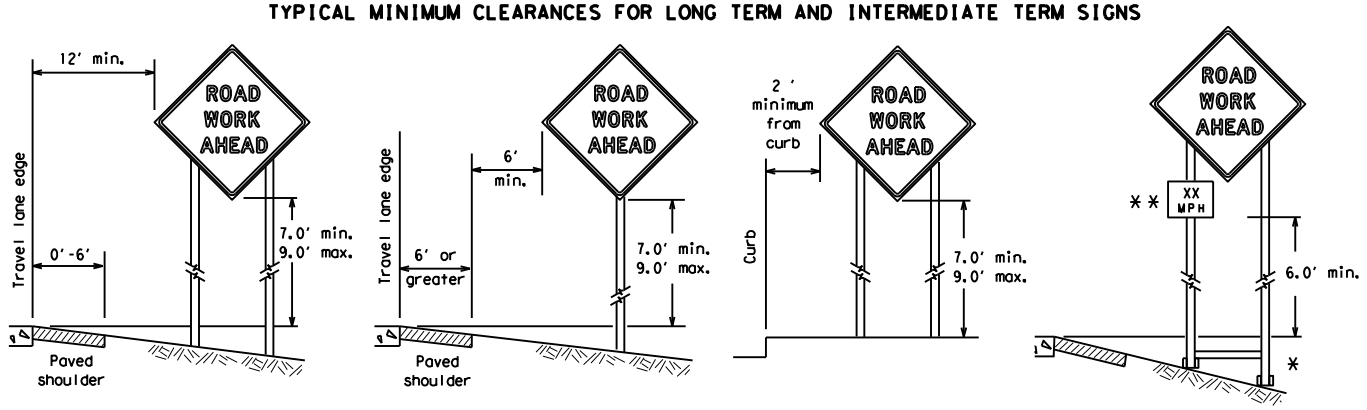

* When placing skid supports on unlevel ground, the leg post lengths must be adjusted so the sign appears straight and plumb. Objects shall NOT be placed under skids as a means of leveling.

** When plaques are placed on dual-leg supports, they should be attached to the upright nearest the travel lane. Supplemental plaques (advisory or distance) should not cover the surface of the parent sign.

ATTACHMENT FOR SIGN SUPPORTS

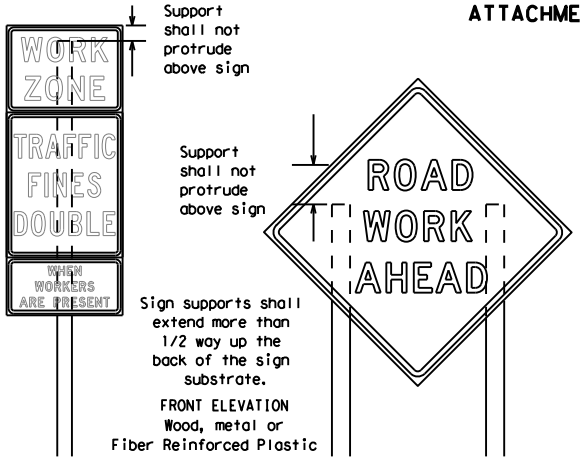

Splicing embedded perforated square metal tubing in order to extend post height will only be allowed when the splice is made using four bolts, two above and two below the spice point. Splice must be located entirely behind the sign substrate, not near the base of the support. Splice insert lengths should be at least 5 times nominal post size, centered on the splice and of at least the same gauge material.

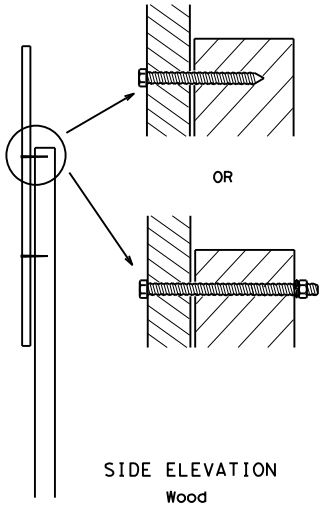

Attachment to wooden supports will be by bolts and nuts or screws. Use TxDOT's or manufacturer's recommended procedures for attaching sign substrates to other types of sign supports

Nails shall NOT be allowed. Each sign shall be attached directly to the sign support. Multiple signs shall not be joined or spliced by any means. Wood supports shall not be extended or repaired by splicing or other means.

STOP/SLOW PADDLES

1. STOP/SLOW paddles are the primary method to control traffic by flaggers. The STOP/SLOW paddle size should be 24" x 24" as detailed below.
2. When used at night, the STOP/SLOW paddle shall be retroreflectorized.
3. STOP/SLOW paddles may be attached to a staff with a minimum length of 6' to the bottom of the sign.
4. Any lights incorporated into the STOP or SLOW paddle faces shall only be as specifically described in Section 6E.03 Hand Signaling Devices in the TMUTCD.

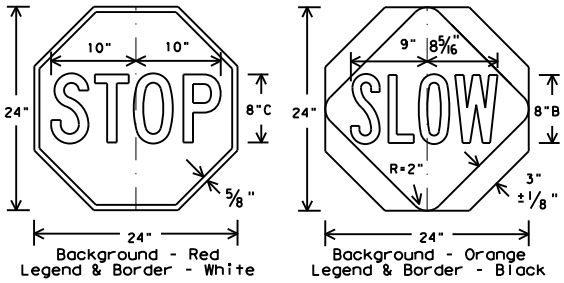

CONTRACTOR REQUIREMENTS FOR MAINTAINING PERMANENT SIGNS WITHIN THE PROJECT LIMITS

1. Permanent signs are used to give notice of traffic laws or regulations, call attention to conditions that are potentially hazardous to traffic operations, show route designations, destinations, directions, distances, services, points of interest, and other geographical, recreational, or cultural information. Drivers proceeding through a work zone need the same, if not better route guidance as normally installed on a roadway without construction.
2. When permanent regulatory or warning signs conflict with work zone conditions, remove or cover the permanent signs until the permanent sign message matches the roadway condition.
3. When existing permanent signs are moved and relocated due to construction purposes, they shall be visible to motorists at all times.
4. If existing signs are to be relocated on their original supports, they shall be installed on crashworthy bases as shown on the SMD Standard sheets. The signs shall meet the required mounting heights shown on the BC Sheets or the SMD Standards. This work should be paid for under the appropriate pay item for relocating existing signs.
5. If permanent signs are to be removed and relocated using temporary supports, the Contractor shall use crashworthy supports as shown on the BC sheets or the CWZTCD. The signs shall meet the required mounting heights shown on the BC Sheets or the SMD Standards during construction. This work should be paid for under the appropriate pay item for relocating existing signs.
6. Any sign or traffic control device that is struck or damaged by the Contractor or his/her construction equipment shall be replaced as soon as possible by the contractor and temporarily repaired for the motorists. This will be subsidiary to Item 502.

SHEET 7 OF 29

Texas Department of Transportation

Traffic Operations Division Standard

BARRICADE AND CONSTRUCTION TEMPORARY SIGN NOTES

BC(4)-14

FILE: bcsm-14.dgn	DN: TxDOT	CK: TxDOT	DW: TxDOT	CK: TxDOT
© TxDOT November 2002	CONT	SECT	JOB	HIGHWAY
REVISIONS 9-07 8-14 7-13	DIST		COUNTY	SHEET NO. 18

DISCLAIMER:
The use of this standard is governed by the "Texas Engineering Practice Act". No warranty of any kind is made by TxDOT for any purpose whatsoever. TxDOT assumes no responsibility for the conversion of this standard to other formats or for incorrect results or damages resulting from its use.

DATE:
FILE:

GENERAL NOTES FOR WORK ZONE SIGNS

1. Contractor shall install and maintain signs in a straight and plumb condition and/or as directed by the Engineer.
2. Wooden sign posts shall be painted white.
3. Barricades shall NOT be used as sign supports.
4. All signs shall be installed in accordance with the plans or as directed by the Engineer. Signs shall be used to regulate, warn, and guide the traveling public safely through the work zone.
5. The Contractor may furnish either the sign design shown in the plans or in the "Standard Highway Sign Designs for Texas" (SHSD). The Engineer/Inspector may require the Contractor to furnish other work zone signs that are shown in the TMUTCD but may have been omitted from the plans. Any variation in the plans shall be documented by written agreement between the Engineer and the Contractor's Responsible Person. All changes must be documented in writing before being implemented. This can include documenting the changes in the Inspector's TxDOT diary and having both the Inspector and Contractor initial and date the agreed upon changes.
6. The Contractor shall furnish sign supports listed in the "Compliant Work Zone Traffic Control Device List" (CWZTCD). The Contractor shall install the sign support in accordance with the manufacturer's recommendations. If there is a question regarding installation procedures, the Contractor shall furnish the Engineer a copy of the manufacturer's installation recommendations so the Engineer can verify the correct procedures are being followed.
7. The Contractor is responsible for installing signs on approved supports and replacing signs with damaged or cracked substrates and/or damaged or marred reflective sheeting as directed by the Engineer/Inspector.
8. Identification markings may be shown only on the back of the sign substrate. The maximum height of letters and/or company logos used for identification shall be 1 inch.
9. The Contractor shall replace damaged wood posts. New or damaged wood sign posts shall not be spliced.

DURATION OF WORK (as defined by the "Texas Manual on Uniform Traffic Control Devices" Part 6)

1. The types of sign supports, sign mounting height, the size of signs, and the type of sign substrates can vary based on the type of work being performed. The Engineer is responsible for selecting the appropriate size sign for the type of work being performed. The Contractor is responsible for ensuring the sign support, sign mounting height and substrate meets manufacturer's recommendations in regard to crashworthiness and duration of work requirements.
   a. Long-term stationary - work that occupies a location more than 3 days.
   b. Intermediate-term stationary - work that occupies a location more than one daylight period up to 3 days, or nighttime work lasting more than one hour.
   c. Short-term stationary - daytime work that occupies a location for more than 1 hour in a single daylight period.
   d. Short duration - work that occupies a location up to 1 hour.
   e. Mobile - work that moves continuously or intermittently (stopping for up to approximately 15 minutes.)

SIGN MOUNTING HEIGHT

1. The bottom of Long-term/Intermediate-term signs shall be at least 7 feet, but not more than 9 feet, above the paved surface, except as shown for supplemental plaques mounted below other signs.
2. The bottom of Short-term/Short Duration signs shall be a minimum of 1 foot above the pavement surface but no more than 2 feet above the ground.
3. Long-term/Intermediate-term Signs may be used in lieu of Short-term/Short Duration signing.
4. Short-term/Short Duration signs shall be used only during daylight and shall be removed at the end of the workday or raised to appropriate Long-term/Intermediate sign height.
5. Regulatory signs shall be mounted at least 7 feet, but not more than 9 feet, above the paved surface regardless of work duration.

SIZE OF SIGNS

1. The Contractor shall furnish the sign sizes shown on BC (2) unless otherwise shown in the plans or as directed by the Engineer.

SIGN SUBSTRATES

1. The Contractor shall ensure the sign substrate is installed in accordance with the manufacturer's recommendations for the type of sign support that is being used. The CWZTCD lists each substrate that can be used on the different types and models of sign supports.
2. "Mesh" type materials are NOT an approved sign substrate, regardless of the tightness of the weave.
3. All wooden individual sign panels fabricated from 2 or more pieces shall have one or more plywood cleat, 1/2" thick by 6" wide, fastened to the back of the sign and extending fully across the sign. The cleat shall be attached to the back of the sign using wood screws that do not penetrate the face of the sign panel. The screws shall be placed on both sides of the splice and spaced at 6" centers. The Engineer may approve other methods of splicing the sign face.

REFLECTIVE SHEETING

1. All signs shall be retroreflective and constructed of sheeting meeting the color and retro-reflectivity requirements of DMS-8300 for rigid signs or DMS-8310 for roll-up signs. The web address for DMS specifications is shown on BC(1).
2. White sheeting, meeting the requirements of DMS-8300 Type A, shall be used for signs with a white background.
3. Orange sheeting, meeting the requirements of DMS-8300 Type B_{FL} or Type C_{FL}, shall be used for rigid signs with orange backgrounds.

SIGN LETTERS

1. All sign letters and numbers shall be clear, and open rounded type uppercase alphabet letters as approved by the Federal Highway Administration (FHWA) and as published in the "Standard Highway Sign Design for Texas" manual. Signs, letters and numbers shall be of first class workmanship in accordance with Department Standards and Specifications.

REMOVING OR COVERING

1. When sign messages may be confusing or do not apply, the signs shall be removed or completely covered.
2. Long-term stationary or intermediate stationary signs installed on square metal tubing may be turned away from traffic 90 degrees when the sign message is not applicable. This technique may not be used for signs installed in the median of divided highways or near any intersections where the sign may be seen from approaching traffic.
3. Signs installed on wooden skids shall not be turned at 90 degree angles to the roadway. These signs should be removed or completely covered when not required.
4. When signs are covered, the material used shall be opaque, such as heavy mil black plastic, or other materials which will cover the entire sign face and maintain their opaque properties under automobile headlights at night, without damaging the sign sheeting.
5. Burlap shall NOT be used to cover signs.
6. Duct tape or other adhesive material shall NOT be affixed to a sign face.
7. Signs and anchor stubs shall be removed and holes backfilled upon completion of work.

SIGN SUPPORT WEIGHTS

1. Where sign supports require the use of weights to keep from turning over, the use of sandbags with dry, cohesionless sand should be used.
2. The sandbags will be tied shut to keep the sand from spilling and to maintain a constant weight.
3. Rock, concrete, iron, steel or other solid objects shall not be permitted for use as sign support weights.
4. Sandbags should weigh a minimum of 35 lbs and a maximum of 50 lbs.
5. Sandbags shall be made of a durable material that tears upon vehicular impact. Rubber (such as tire inner tubes) shall NOT be used.
6. Rubber ballasts designed for channelizing devices should not be used for ballast on portable sign supports. Sign supports designed and manufactured with rubber bases may be used when shown on the CWZTCD list.
7. Sandbags shall only be placed along or laid over the base supports of the traffic control device and shall not be suspended above ground level or hung with rope, wire, chains or other fasteners. Sandbags shall be placed along the length of the skids to weigh down the sign support.
8. Sandbags shall NOT be placed under the skid and shall not be used to level sign supports placed on slopes.

FLAGS ON SIGNS

1. Flags may be used to draw attention to warning signs. When used the flag shall be 16 inches square or larger and shall be orange or fluorescent red-orange in color. Flags shall not be allowed to cover any portion of the sign face.

DISCLAIMER:
The use of this standard is governed by the "Texas Engineering Practice Act". No warranty of any kind is made by TxDOT for any purpose whatsoever. TxDOT assumes no responsibility for the conversion of this standard to other formats or for incorrect results or damages resulting from its use.

Texas Department of Transportation

Traffic Operations Division Standard

BARRICADE AND CONSTRUCTION TEMPORARY SIGN NOTES

BC(4)-14

FILE: bcsm-14.dgn	DN: TxDOT	CK: TxDOT	DW: TxDOT	CK: TxDOT
© TxDOT November 2002	CONT	SECT	JOB	HIGHWAY
REVISIONS 9-07 8-14 7-13	DIST		COUNTY 19	SHEET NO.

DATE:
FILE:
Revised: Addendum 02 Concrete Barrier Parking Lot

DISCLAIMER:
The use of this standard is governed by the "Texas Engineering Practice Act". No warranty of any kind is made by TxDOT for any purpose whatsoever. TxDOT assumes no responsibility for the conversion of this standard to other formats or for incorrect results or damages resulting from its use.

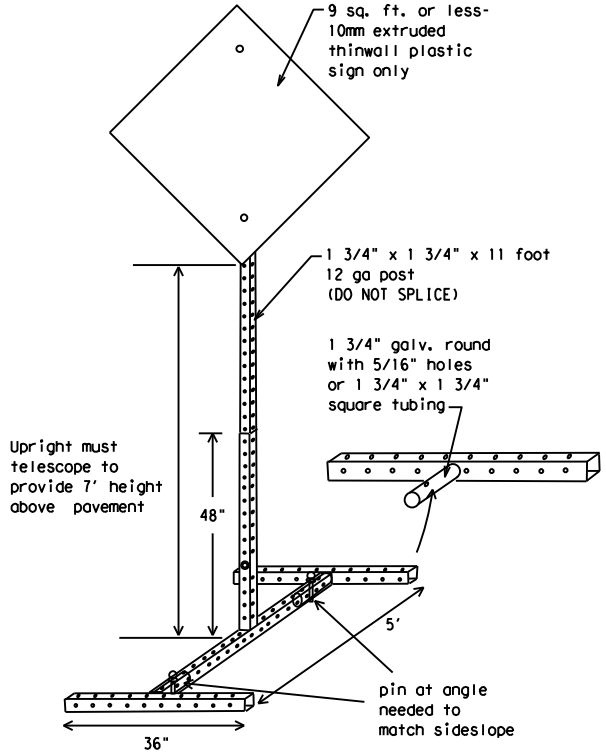

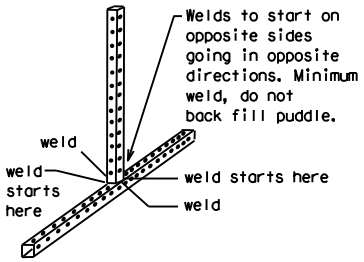

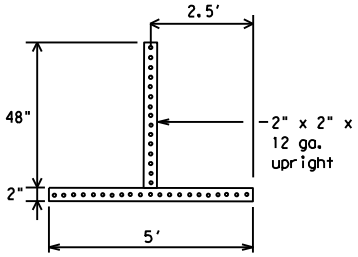

SINGLE LEG BASE
Side View

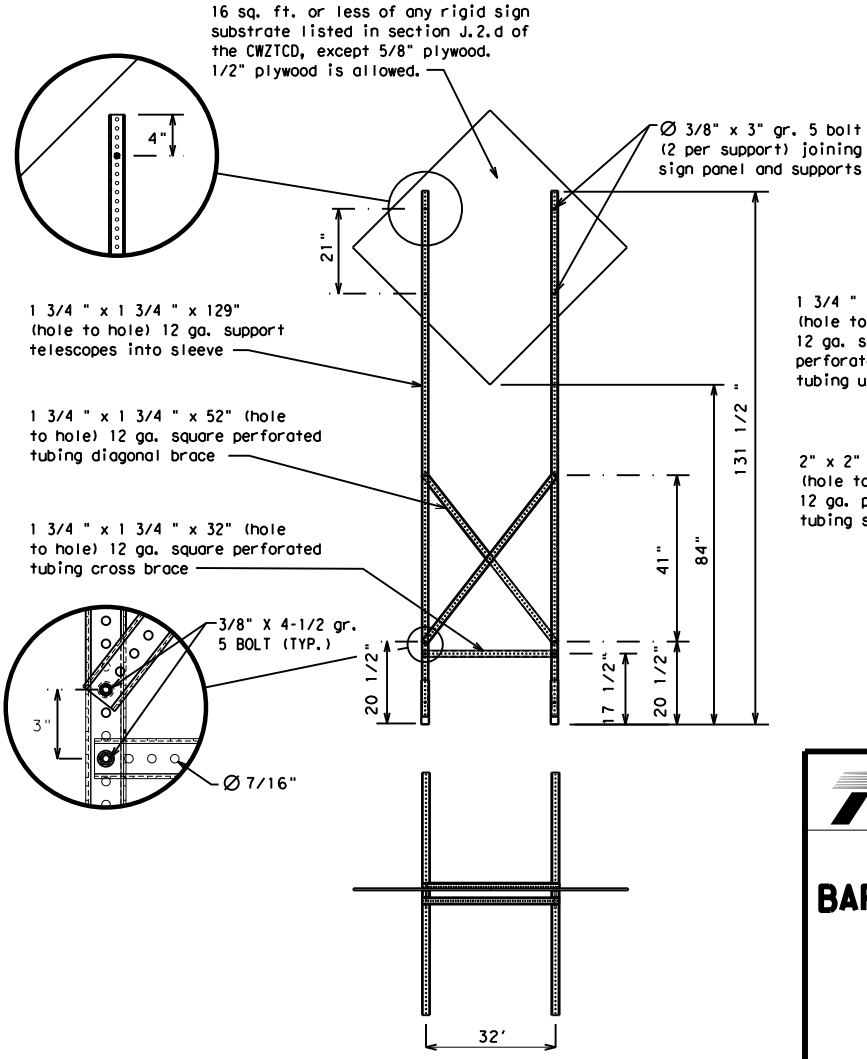

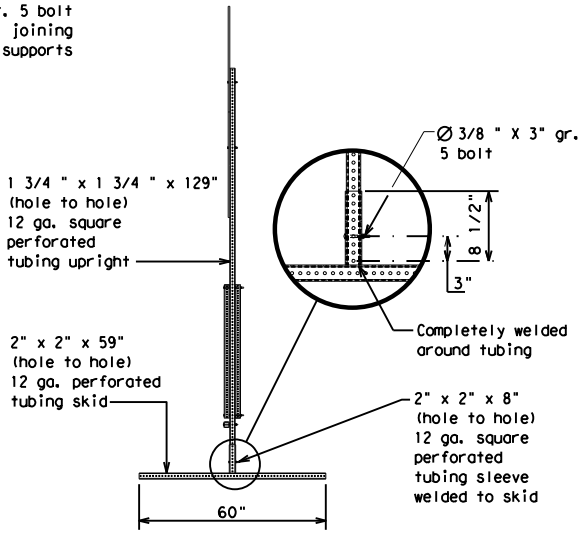

SHEET 9 OF 29

Texas Department of Transportation

Traffic Operations Division Standard

BARRICADE AND CONSTRUCTION TYPICAL SIGN SUPPORT

BC(5)-14

SKID MOUNTED PERFORATED SQUARE STEEL TUBING SIGN SUPPORTS

FILE: bcsm-14.dgn	DN: TxDOT	CK: TxDOT	DW: TxDOT	CK: TxDOT
© TxDOT November 2002	CONT	SECT	JOB	HIGHWAY
REVISIONS 9-07 8-14 7-13			20	

DATE:
FILE: Revised Addendum 02 Concrete Parking Lot

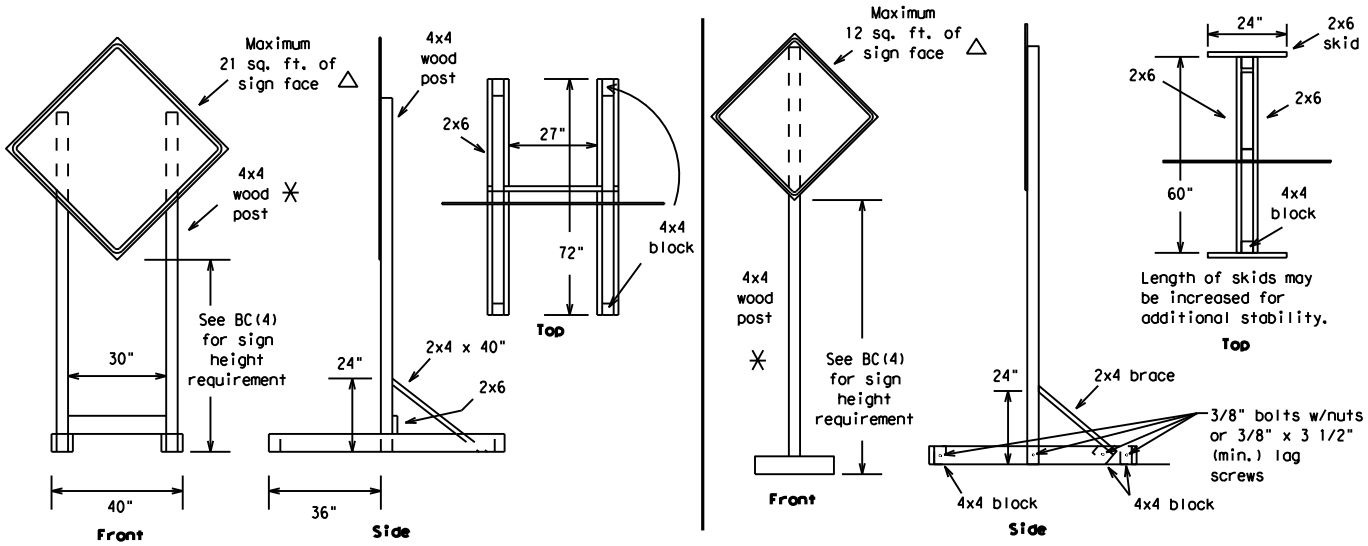

SKID MOUNTED WOOD SIGN SUPPORTS

LONG/INTERMEDIATE TERM STATIONARY - PORTABLE SKID MOUNTED SIGN SUPPORTS □

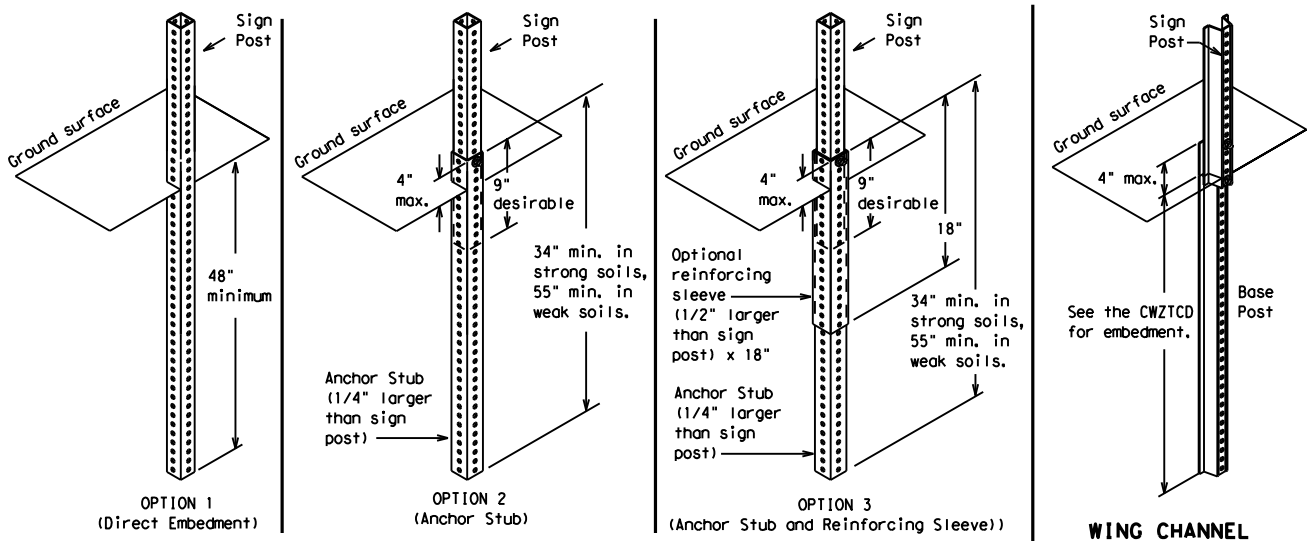

PERFORATED SQUARE METAL TUBING

WING CHANNEL
Lap-splice/base bolted anchor

GROUND MOUNTED SIGN SUPPORTS

Refer to the CWZTCD and the manufacturer's installation procedure for each type sign support.
The maximum sign square footage shall adhere to the manufacturer's recommendation.
Two post installations can be used for larger signs.

Nominal Post Size	Number of Posts	Maximum Sq. feet of Sign Face	Minimum Soil Embedment	Drilled Hole(s) Required
4 x 4	1	12	36"	NO
4 x 4	2	21	36"	NO
4 x 6	1	21	36"	YES
4 x 6	2	36	36"	YES

WOOD POST SYSTEM FOR GROUND MOUNTED SIGN SUPPORTS

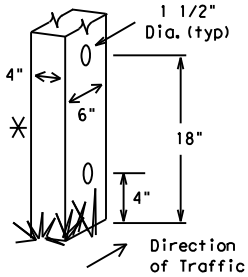

□ See BC(4) for definition of "Work Duration."

✳ Wood sign posts MUST be one piece. Splicing will NOT be allowed. Posts shall be painted white.

△ See the CWZTCD for the type of sign substrate that can be used for each approved sign support.

DISCLAIMER:
The use of this standard is governed by the "Texas Engineering Practice Act". No warranty of any kind is made by TxDOT for any purpose whatsoever. TxDOT assumes no responsibility for the conversion of this standard to other formats or for incorrect results or damages resulting from its use.

DATE:
FILE: Revised Addendum 02 Concrete Parking Lot

Texas Department of Transportation — Traffic Operations Division Standard

BARRICADE AND CONSTRUCTION TYPICAL SIGN SUPPORT

BC(5)-14

FILE: bcsm-14.dgn	DN: TxDOT	CK: TxDOT	DW: TxDOT	CK: TxDOT
© TxDOT November 2002	CONT	SECT	JOB	HIGHWAY
REVISIONS 9-07 8-14 7-13	DIST		COUNTY 21	SHEET NO.

WEDGE ANCHORS

Both steel and plastic Wedge Anchor Systems as shown on the SMD Standard Sheets may be used as temporary sign supports for signs up to 10 square feet of sign face. They may be set in concrete or in sturdy soils if approved by the Engineer. (See web address for "Traffic Engineering Standard Sheets" on BC(1)).

OTHER DESIGNS

MORE DETAILS OF APPROVED LONG/INTERMEDIATE AND SHORT TERM SUPPORTS CAN BE FOUND ON THE CWZTCD LIST. SEE BC(1) FOR WEBSITE LOCATION.

GENERAL NOTES

1. Nails may be used in the assembly of wooden sign supports, but 3/8" bolts with nuts or 3/8" x 3 1/2" lag screws must be used on every joint for final connection.

2. No more than 2 sign posts shall be placed within a 7 ft. circle, except for specific materials noted on the CWZTCD List.

3. When project is completed, all sign supports and foundations shall be removed from the project site. This will be considered subsidiary to Item 502.

DISCLAIMER:
The use of this standard is governed by the "Texas Engineering Practice Act". No warranty of any kind is made by TxDOT for any purpose whatsoever. TxDOT assumes no responsibility for the conversion of this standard to other formats or for incorrect results or damages resulting from its use.

Texas Department of Transportation

Traffic Operations Division Standard

BARRICADE AND CONSTRUCTION TYPICAL SIGN SUPPORT

BC(5)-14

FILE: bcsm-14.dgn	DN: TxDOT	CK: TxDOT	DW: TxDOT	CK: TxDOT
© TxDOT November 2002	CONT	SECT	JOB	HIGHWAY
REVISIONS 9-07 8-14 7-13	DIST	COUNTY 22		SHEET NO.

DATE:
FILE: Revised Addendum 02 Concrete Parking Lot

DISCLAIMER:
The use of this standard is governed by the "Texas Engineering Practice Act". No warranty of any kind is made by TxDOT for any purpose whatsoever. TxDOT assumes no responsibility for the conversion of this standard to other formats or for incorrect results or damages resulting from its use.

DATE:
FILE:

Revised Addendum 02 Concrete Parking Lot

WHEN NOT IN USE, REMOVE THE PCMS FROM THE RIGHT-OF-WAY OR PLACE THE PCMS BEHIND BARRIER OR GUARDRAIL WITH SIGN PANEL TURNED PARALLEL TO TRAFFIC

PORTABLE CHANGEABLE MESSAGE SIGNS

1. The Engineer/Inspector shall approve all messages used on portable changeable message signs (PCMS).
2. Messages on PCMS should contain no more than 8 words (about four to eight characters per word), not including simple words such as "TO," "FOR," "AT," etc.
3. Messages should consist of a single phase, or two phases that alternate. Three-phase messages are not allowed. Each phase of the message should convey a single thought, and must be understood by itself.
4. Use the word "EXIT" to refer to an exit ramp on a freeway; i.e., "EXIT CLOSED." Do not use the term "RAMP."
5. Always use the route or interstate designation (IH, US, SH, FM) along with the number when referring to a roadway.
6. When in use the bottom of a stationary PCMS message panel should be a minimum 7 feet above the roadway, where possible.
7. The message term "WEEKEND" should be used only if the work is to start on Saturday morning and end by Sunday evening at midnight. Actual days and hours of work should be displayed on the PCMS if work is to begin on Friday evening and/or continue into Monday morning.
8. The Engineer/Inspector may select one of two options which are available for displaying a two-phase message on a PCMS. Each phase may be displayed for either four seconds each or for three seconds each.
9. Do not "flash" messages or words included in a message. The message should be steady burn or continuous while displayed.
10. Do not present redundant information on a two-phase message; i.e., keeping two lines of the message the same and changing the third line.
11. Do not use the word "Danger" in message.
12. Do not display the message "LANES SHIFT LEFT" or "LANES SHIFT RIGHT" on a PCMS. Drivers do not understand the message.
13. Do not display messages that scroll horizontally or vertically across the face of the sign.
14. The following table lists abbreviated words and two-word phrases that are acceptable for use on a PCMS. Both words in a phrase must be displayed together. Words or phrases not on this list should not be abbreviated, unless shown in the TMUTCD.
15. PCMS character height should be at least 18 inches for trailer mounted units. They should be visible from at least 1/2 (.5) mile and the text should be legible from at least 600 feet at night and 800 feet in daylight. Truck mounted units must have a character height of 10 inches and must be legible from at least 400 feet.
16. Each line of text should be centered on the message board rather than left or right justified.
17. If disabled, the PCMS should default to an illegible display that will not alarm motorists and will only be used to alert workers that the PCMS has malfunctioned. A pattern such as a series of horizontal solid bars is appropriate.

WORD OR PHRASE	ABBREVIATION
Access Road	ACCS RD
Alternate	ALT
Avenue	AVE
Best Route	BEST RTE
Boulevard	BLVD
Bridge	BRDG
Cannot	CANT
Center	CTR
Construction Ahead	CONST AHD
CROSSING	XING
Detour Route	DETOUR RTE
Do Not	DONT
East	E
Eastbound	(route) E
Emergency	EMER
Emergency Vehicle	EMER VEH
Entrance, Enter	ENT
Express Lane	EXP LN
Expressway	EXPWY
XXXX Feet	XXXX FT
Fog Ahead	FOG AHD
Freeway	FRWY, FWY
Freeway Blocked	FWY BLKD
Friday	FRI
Hazardous Driving	HAZ DRIVING
Hazardous Material	HAZMAT
High-Occupancy	HOV
Vehicle Highway	HWY
Hour(s)	HR, HRS
Information	INFO
It Is	ITS
Junction	JCT
Left	LFT
Left Lane	LFT LN
Lane Closed	LN CLOSED
Lower Level	LWR LEVEL
Maintenance	MAINT

WORD OR PHRASE	ABBREVIATION
Major	MAJ
Miles	MI
Miles Per Hour	MPH
Minor	MNR
Monday	MON
Normal	NORM
North	N
Northbound	(route) N
Parking	PKING
Road	RD
Right Lane	RT LN
Saturday	SAT
Service Road	SERV RD
Shoulder	SHLDR
Slippery	SLIP
South	S
Southbound	(route) S
Speed	SPD
Street	ST
Sunday	SUN
Telephone	PHONE
Temporary	TEMP
Thursday	THURS
To Downtown	TO DWNTN
Traffic	TRAF
Travelers	TRVLRS
Tuesday	TUES
Time Minutes	TIME MIN
Upper Level	UPR LEVEL
Vehicles (s)	VEH, VEHS
Warning	WARN
Wednesday	WED
Weight Limit	WT LIMIT
West	W
Westbound	(route) W
Wet Pavement	WET PVMT
Will Not	WONT

Roadway designation # IH-number, US-number, SH-number, FM-number

PCMS SIGNS WITHIN THE R.O.W. SHALL BE BEHIND GUARDRAIL OR CONCRETE BARRIER OR SHALL HAVE A MINIMUM OF FOUR (4) PLASTIC DRUMS PLACED PERPENDICULAR TO TRAFFIC ON THE UPSTREAM SIDE OF THE PCMS, WHEN EXPOSED TO ONE DIRECTION OF TRAFFIC. WHEN EXPOSED TO TWO WAY TRAFFIC, THE FOUR DRUMS SHOULD BE PLACED WITH ONE DRUM AT EACH OF THE FOUR CORNERS OF THE UNIT.

FULL MATRIX PCMS SIGNS

1. When Full Matrix PCMS signs are used, the character height and legibility/visibility requirements shall be maintained as listed in Note 15 under "PORTABLE CHANGEABLE MESSAGE SIGNS" above.
2. When symbol signs, such as the "Flagger Symbol"(CW20-7) are represented graphically on the Full Matrix PCMS sign and, with the approval of the Engineer, it shall maintain the legibility/visibility requirement listed above.
3. When symbol signs are represented graphically on the Full Matrix PCMS, they shall only supplement the use of the static sign represented, and shall not substitute for, or replace that sign.
4. A full matrix PCMS may be used to simulate a flashing arrow board provided it meets the visibility, flash rate and dimming requirements on BC(7), for the same size arrow.

Texas Department of Transportation

Traffic Operations Division Standard

SHEET 12 OF 29

BARRICADE AND CONSTRUCTION PORTABLE CHANGEABLE MESSAGE SIGN (PCMS)

BC(6)-14

FILE: bcsm-14.dgn	DN: TxDOT	CK: TxDOT	DW: TxDOT	CK: TxDOT
© TxDOT November 2002	CONT	SECT	JOB	HIGHWAY
REVISIONS 9-07 8-14 7-13	DIST	COUNT 23	SHEET NO.

DISCLAIMER:
The use of this standard is governed by the "Texas Engineering Practice Act". No warranty of any kind is made by TxDOT for any purpose whatsoever. TxDOT assumes no responsibility for the conversion of this standard to other formats or for incorrect results or damages resulting from its use.

DATE:
FILE:

Revised Addendum 02 Concrete Parking Lot

RECOMMENDED PHASES AND FORMATS FOR PCMS MESSAGES DURING ROADWORK ACTIVITIES

(The Engineer may approve other messages not specifically covered here.)

Phase 1: Condition Lists

Road/Lane/Ramp Closure List

FREEWAY CLOSED X MILE	FRONTAGE ROAD CLOSED	ROADWORK XXX FT	ROAD REPAIRS XXXX FT
ROAD CLOSED AT SH XXX	SHOULDER CLOSED XXX FT	FLAGGER XXXX FT	LANE NARROWS XXXX FT
ROAD CLSD AT FM XXXX	RIGHT LN CLOSED XXX FT	RIGHT LN NARROWS XXXX FT	TWO-WAY TRAFFIC XX MILE
RIGHT X LANES CLOSED	RIGHT X LANES OPEN	MERGING TRAFFIC XXXX FT	CONST TRAFFIC XXX FT
CENTER LANE CLOSED	DAYTIME LANE CLOSURES	LOOSE GRAVEL XXXX FT	UNEVEN LANES XXXX FT
NIGHT LANE CLOSURES	I-XX SOUTH EXIT CLOSED	DETOUR X MILE	ROUGH ROAD XXXX FT
VARIOUS LANES CLOSED	EXIT XXX CLOSED X MILE	ROADWORK PAST SH XXXX	ROADWORK NEXT FRI-SUN
EXIT CLOSED	RIGHT LN TO BE CLOSED	BUMP XXXX FT	US XXX EXIT X MILES
MALL DRIVEWAY CLOSED	X LANES CLOSED TUE - FRI	TRAFFIC SIGNAL XXXX FT	LANES SHIFT *
XXXXXXXX BLVD CLOSED			

Other Condition List

* LANES SHIFT in Phase 1 must be used with STAY IN LANE in Phase 2.

Phase 2: Possible Component Lists

Action to Take/Effect on Travel List

MERGE RIGHT	FORM X LINES RIGHT
DETOUR NEXT X EXITS	USE XXXXX RD EXIT
USE EXIT XXX	USE EXIT I-XX NORTH
STAY ON US XXX SOUTH	USE I-XX E TO I-XX N
TRUCKS USE US XXX N	WATCH FOR TRUCKS
WATCH FOR TRUCKS	EXPECT DELAYS
EXPECT DELAYS	PREPARE TO STOP
REDUCE SPEED XXX FT	END SHOULDER USE
USE OTHER ROUTES	WATCH FOR WORKERS
STAY IN LANE *	

Location List

AT FM XXXX
BEFORE RAILROAD CROSSING
NEXT X MILES
PAST US XXX EXIT
XXXXXXX TO XXXXXXX
US XXX TO FM XXXX

Warning List

SPEED LIMIT XX MPH
MAXIMUM SPEED XX MPH
MINIMUM SPEED XX MPH
ADVISORY SPEED XX MPH
RIGHT LANE EXIT
USE CAUTION
DRIVE SAFELY
DRIVE WITH CARE

** Advance Notice List

TUE-FRI XX AM-X PM
APR XX-XX X PM-X AM
BEGINS MONDAY
BEGINS MAY XX
MAY X-X XX PM - XX AM
NEXT FRI-SUN
XX AM TO XX PM
NEXT TUE AUG XX
TONIGHT XX PM-XX AM

** See Application Guidelines Note 6.

APPLICATION GUIDELINES

1. Only 1 or 2 phases are to be used on a PCMS.
2. The 1st phase (or both) should be selected from the "Road/Lane/Ramp Closure List" and the "Other Condition List".
3. A 2nd phase can be selected from the "Action to Take/Effect on Travel, Location, General Warning, or Advance Notice Phase Lists".
4. A Location Phase is necessary only if a distance or location is not included in the first phase selected.
5. If two PCMS are used in sequence, they must be separated by a minimum of 1000 ft. Each PCMS shall be limited to two phases, and should be understandable by themselves.
6. For advance notice, when the current date is within seven days of the actual work date, calendar days should be replaced with days of the week. Advance notification should typically be for no more than one week prior to the work.

WORDING ALTERNATIVES

1. The words RIGHT, LEFT and ALL can be interchanged as appropriate.
2. Roadway designations IH, US, SH, FM and LP can be interchanged as appropriate.
3. EAST, WEST, NORTH and SOUTH (or abbreviations E, W, N and S) can be interchanged as appropriate.
4. Highway names and numbers replaced as appropriate.
5. ROAD, HIGHWAY and FREEWAY can be interchanged as needed.
6. AHEAD may be used instead of distances if necessary.
7. FT and MI, MILE and MILES interchanged as appropriate.
8. AT, BEFORE and PAST interchanged as needed.
9. Distances or AHEAD can be eliminated from the message if a location phase is used.

Texas Department of Transportation

Traffic Operations Division Standard

SHEET 13 OF 29

BARRICADE AND CONSTRUCTION PORTABLE CHANGEABLE MESSAGE SIGN (PCMS)

BC(6)-14

FILE: bcsm-14.dgn	DN: TxDOT	CK: TxDOT	DW: TxDOT	CK: TxDOT	
© TxDOT November 2002	CONT	SECT	JOB	HIGHWAY	
REVISIONS 9-07 8-14 7-13	DIST		COUNT 24		SHEET NO.

DISCLAIMER:
The use of this standard is governed by the "Texas Engineering Practice Act". No warranty of any kind is made by TxDOT for any purpose whatsoever. TxDOT assumes no responsibility for the conversion of this standard to other formats or for incorrect results or damages resulting from its use.

DATE:
FILE:

Revised Addendum 02 Concrete Parking Lot

1. Barrier Reflectors shall be pre-qualified, and conform to the color and reflectivity requirements of DMS-8600. A list of prequalified Barrier Reflectors can be found at the Material Producer List web address shown on BC(1).
2. Color of Barrier Reflectors shall be as specified in the TMUTCD. The cost of the reflectors shall be considered subsidiary to Item 512.

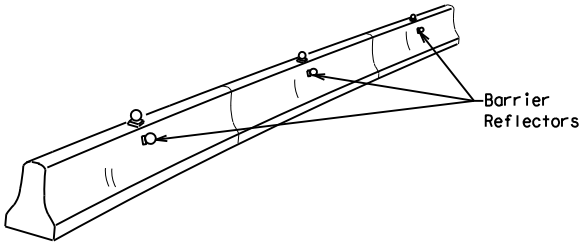

CONCRETE TRAFFIC BARRIER (CTB)

3. Where traffic is on one side of the CTB, two (2) Barrier Reflectors shall be mounted in approximately the midsection of each section of CTB. An alternate mounting location is uniformly spaced at one end of each CTB. This will allow for attachment of a barrier grapple without damaging the reflector. The Barrier Reflector mounted on the side of the CTB shall be located directly below the reflector mounted on top of the barrier, as shown in the detail above.
4. Where CTB separates two-way traffic, three barrier reflectors shall be mounted on each section of CTB. The reflector unit on top shall have two yellow reflective faces (Bi-Directional)while the reflectors on each side of the barrier shall have one yellow reflective face, as shown in the detail above.
5. When CTB separates traffic traveling in the same direction, no barrier reflectors will be required on top of the CTB.
6. Barrier Reflector units shall be yellow or white in color to match the edgeline being supplemented.
7. Maximum spacing of Barrier Reflectors is forty (40) feet.
8. Pavement markers or temporary flexible-reflective roadway marker tabs shall NOT be used as CTB delineation.
9. Attachment of Barrier Reflectors to CTB shall be per manufacturer's recommendations.
10. Missing or damaged Barrier Reflectors shall be replaced as directed by the Engineer.
11. Single slope barriers shall be delineated as shown on the above detail.

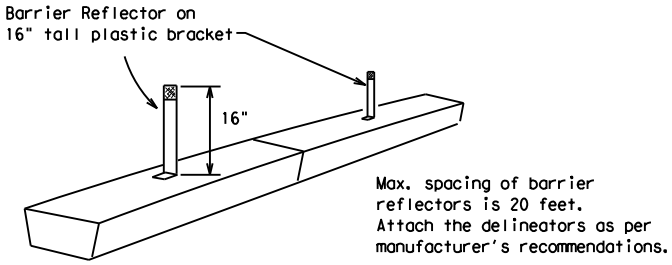

LOW PROFILE CONCRETE BARRIER (LPCB)

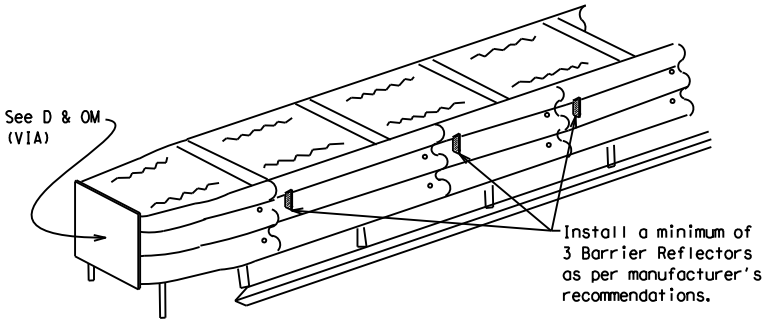

DELINEATION OF END TREATMENTS

END TREATMENTS FOR CTB'S USED IN WORK ZONES

End treatments used on CTB's in work zones shall meet crashworthy standards as defined in the National Cooperative Highway Research Report 350. Refer to the CWZTCD List for approved end treatments and manufacturers.

BARRIER REFLECTORS FOR CONCRETE TRAFFIC BARRIER AND ATTENUATORS

Texas Department of Transportation

Traffic Operations Division Standard

SHEET 14 OF 29

BARRICADE AND CONSTRUCTION ARROW PANEL, REFLECTORS, WARNING LIGHTS & ATTENUATOR

BC(7)-14

FILE: bcsm-14.dgn	DN: TxDOT	CK: TxDOT	DW: TxDOT	CK: TxDOT
© TxDOT November 2002	CONT	SECT	JOB	HIGHWAY
REVISIONS				
9-07 8-14 7-13	DIST	COUNT 25	SHEET NO.	

DISCLAIMER:
The use of this standard is governed by the "Texas Engineering Practice Act". No warranty of any kind is made by TxDOT for any purpose whatsoever. TxDOT assumes no responsibility for the conversion of this standard to other formats or for incorrect results or damages resulting from its use.

DATE:
FILE:

Revised Addendum 02 Concrete Parking Lot

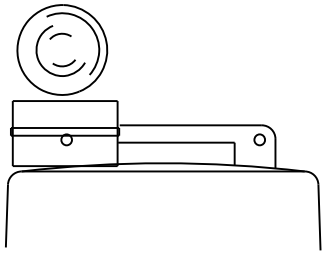

Type C Warning Light or approved substitute mounted on a drum adjacent to the travel way.

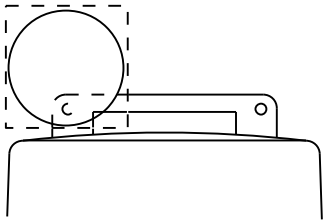

Warning reflector may be round or square. Must have a yellow reflective surface area of at least 30 square inches

WARNING LIGHTS

1. Warning lights shall meet the requirements of the TMUTCD.
2. Warning lights shall NOT be installed on barricades.
3. Type A-Low Intensity Flashing Warning Lights are commonly used with drums. They are intended to warn of or mark a potentially hazardous area. Their use shall be as indicated on this sheet and/or other sheets of the plans by the designation "FL". The Type A Warning Lights shall not be used with signs manufactured with Type B_{FL} or C_{FL} Sheeting meeting the requirements of Departmental Material Specification DMS-8300.
4. Type-C and Type D 360 degree Steady Burn Lights are intended to be used in a series for delineation to supplement other traffic control devices. Their use shall be as indicated on this sheet and/or other sheets of the plans by the designation "SB".
5. The Engineer/Inspector or the plans shall specify the location and type of warning lights to be installed on the traffic control devices.
6. When required by the Engineer, the Contractor shall furnish a copy of the warning lights certification. The warning light manufacturer will certify the warning lights meet the requirements of the latest ITE Purchase Specifications for Flashing and Steady-Burn Warning Lights.
7. When used to delineate curves, Type-C and Type D Steady Burn Lights should only be placed on the outside of the curve, not the inside.
8. The location of warning lights and warning reflectors on drums shall be as shown elsewhere in the plans.

WARNING LIGHTS MOUNTED ON PLASTIC DRUMS

1. Type A flashing warning lights are intended to warn drivers that they are approaching or are in a potentially hazardous area.
2. Type A random flashing warning lights are not intended for delineation and shall not be used in a series.
3. A series of sequential flashing warning lights placed on channelizing devices to form a merging taper may be used for delineation. If used, the successive flashing of the sequential warning lights should occur from the beginning of the taper to the end of the merging taper in order to identify the desired vehicle path. The rate of flashing for each light shall be 65 flashes per minute, plus or minus 10 flashes.
4. Type C and D steady-burn warning lights are intended to be used in a series to delineate the edge of the travel lane on detours, on lane changes, on lane closures, and on other similar conditions.
5. Type A, Type C and Type D warning lights shall be installed at locations as detailed on other sheets in the plans.
6. Warning lights shall not be installed on a drum that has a sign, chevron or vertical panel.
7. The maximum spacing for warning lights on drums should be identical to the channelizing device spacing.

WARNING REFLECTORS MOUNTED ON PLASTIC DRUMS AS A SUBSTITUTE FOR TYPE C (STEADY BURN) WARNING LIGHTS

1. A warning reflector or approved substitute may be mounted on a plastic drum as a substitute for a Type C, steady burn warning light at the discretion of the Contractor unless otherwise noted in the plans.
2. The warning reflector shall be yellow in color and shall be manufactured using a sign substrate approved for use with plastic drums listed on the CWZTCD.
3. The warning reflector shall have a minimum retroreflective surface area (one-side) of 30 square inches.
4. Round reflectors shall be fully reflectorized, including the area where attached to the drum.
5. Square substrates must have a minimum of 30 square inches of reflectorized sheeting. They do not have to be reflectorized where it attaches to the drum.
6. The side of the warning reflector facing approaching traffic shall have sheeting meeting the color and retroreflectivity requirements for DMS 8300-Type B or Type C.
7. When used near two-way traffic, both sides of the warning reflector shall be reflectorized.
8. The warning reflector should be mounted on the side of the handle nearest approaching traffic.
9. The maximum spacing for warning reflectors should be identical to the channelizing device spacing requirements.

TRUCK-MOUNTED ATTENUATORS

1. Truck-mounted attenuators (TMA) used on TxDOT facilities must meet the requirements outlined in the National Cooperative Highway Research Report No. 350 (NCHRP 350) or the Manual for Assessing Safety Hardware (MASH).
2. Refer to the CWZTCD for the requirements of Level 2 or Level 3 TMAs.
3. Refer to the CWZTCD for a list of approved TMAs.
4. TMAs are required on freeways unless otherwise noted in the plans.
5. A TMA should be used anytime that it can be positioned 30 to 100 feet in advance of the area of crew exposure without adversely affecting the work performance.
6. The only reason a TMA should not be required is when a work area is spread down the roadway and the work crew is an extended distance from the TMA.

Texas Department of Transportation

Traffic Operations Division Standard

BARRICADE AND CONSTRUCTION ARROW PANEL, REFLECTORS, WARNING LIGHTS & ATTENUATOR

BC(7)-14

FILE: bcsm-14.dgn	DN: TxDOT	CK: TxDOT	DW: TxDOT	CK: TxDOT
© TxDOT November 2002	CONT	SECT	JOB	HIGHWAY
REVISIONS 9-07 8-14 7-13	DIST	COUNT 26	SHEET NO.

FLASHING ARROW BOARDS

Arrow Boards may be located behind channelizing devices in place for a shoulder taper or merging taper, otherwise they shall be delineated with four (4) channelizing devices placed perpendicular to traffic on the upstream side of traffic.

1. The Flashing Arrow Board should be used for all lane closures on multi-lane roadways, or slow moving maintenance or construction activities on the travel lanes.
2. Flashing Arrow Boards should not be used on two-lane, two-way roadways, detours, diversions or work on shoulders unless the "CAUTION" display (see detail below) is used.
3. The Engineer/Inspector shall choose all appropriate signs, barricades and/or other traffic control devices that should be used in conjunction with the Flashing Arrow Board.
4. The Flashing Arrow Board should be able to display the following symbols:

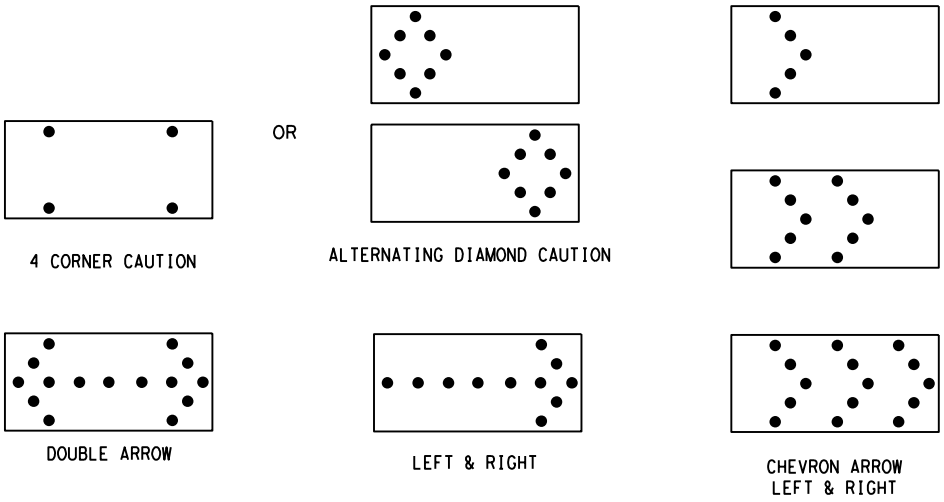

5. The "CAUTION" display consists of four corner lamps flashing simultaneously, or the Alternating Diamond Caution mode as shown.
6. The straight line caution display is NOT ALLOWED.
7. The Flashing Arrow Board shall be capable of minimum 50 percent dimming from rated lamp voltage. The flashing rate of the lamps shall not be less than 25 nor more than 40 flashes per minute.
8. Minimum lamp "on time" shall be approximately 50 percent for the flashing arrow and equal intervals of 25 percent for each sequential phase of the flashing chevron.
9. The sequential arrow display is NOT ALLOWED.
10. The flashing arrow display is the TxDOT standard; however, the sequential Chevron display may be used during daylight operations.
11. The Flashing Arrow Board shall be mounted on a vehicle, trailer or other suitable support.
12. A Flashing Arrow Board SHALL NOT BE USED to laterally shift traffic.
13. A full matrix PCMS may be used to simulate a Flashing Arrow Board provided it meets visibility, flash rate and dimming requirements on this sheet for the same size arrow.
14. Minimum mounting height of trailer mounted Arrow Boards should be 7 feet from roadway to bottom of panel.

REQUIREMENTS

TYPE	MINIMUM SIZE	MINIMUM NUMBER OF PANEL LAMPS	MINIMUM VISIBILITY DISTANCE
B	30 x 60	13	3/4 mile
C	48 x 96	15	1 mile

ATTENTION

Flashing Arrow Boards shall be equipped with automatic dimming devices.

WHEN NOT IN USE, REMOVE THE ARROW BOARD FROM THE RIGHT-OF-WAY OR PLACE THE ARROW BOARD BEHIND CONCRETE TRAFFIC BARRIER OR GUARDRAIL.

Texas Department of Transportation

Traffic Operations Division Standard

BARRICADE AND CONSTRUCTION ARROW PANEL, REFLECTORS, WARNING LIGHTS & ATTENUATOR

BC(7)-14

FILE: bcsm-14.dgn	DN: TxDOT	CK: TxDOT	DW: TxDOT	CK: TxDOT
© TxDOT November 2002	CONT	SECT	JOB	HIGHWAY
REVISIONS 9-07 8-14 7-13	DIST	COUNTY 27		SHEET NO.

DISCLAIMER:
The use of this standard is governed by the "Texas Engineering Practice Act". No warranty of any kind is made by TxDOT for any purpose whatsoever. TxDOT assumes no responsibility for the conversion of this standard to other formats or for incorrect results or damages resulting from its use.

DATE:
FILE: Revised Addendum 02 Concrete Parking Lot

GENERAL NOTES

1. For long term stationary work zones on freeways, drums shall be used as the primary channelizing device.
2. For intermediate term stationary work zones on freeways, drums should be used as the primary channelizing device but may be replaced in tangent sections by vertical panels, or 42" two-piece cones. In tangent sections one-piece cones may be used with the approval of the Engineer but only if personnel are present on the project at all times to maintain the cones in proper position and location.
3. For short term stationary work zones on freeways, drums are the preferred channelizing device but may be replaced in tapers, transitions and tangent sections by vertical panels, two-piece cones or one-piece cones as approved by the Engineer.
4. Drums and all related items shall comply with the requirements of the current version of the "Texas Manual on Uniform Traffic Control Devices" (TMUTCD) and the "Compliant Work Zone Traffic Control Devices List" (CWZTCD).
5. Drums, bases, and related materials shall exhibit good workmanship and shall be free from objectionable marks or defects that would adversely affect their appearance or serviceability.
6. The Contractor shall have a maximum of 24 hours to replace any plastic drums identified for replacement by the Engineer/Inspector. The replacement device must be an approved device.

GENERAL DESIGN REQUIREMENTS

Pre-qualified plastic drums shall meet the following requirements:

1. Plastic drums shall be a two-piece design; the "body" of the drum shall be the top portion and the "base" shall be the bottom.
2. The body and base shall lock together in such a manner that the body separates from the base when impacted by a vehicle traveling at a speed of 20 MPH or greater but prevents accidental separation due to normal handling and/or air turbulence created by passing vehicles.
3. Plastic drums shall be constructed of lightweight flexible, and deformable materials. The Contractor shall NOT use metal drums or single piece plastic drums as channelization devices or sign supports.
4. Drums shall present a profile that is a minimum of 18 inches in width at the 36 inch height when viewed from any direction. The height of drum unit (body installed on base) shall be a minimum of 36 inches and a maximum of 42 inches.
5. The top of the drum shall have a built-in handle for easy pickup and shall be designed to drain water and not collect debris. The handle shall have a minimum of two widely spaced 9/16 inch diameter holes to allow attachment of a warning light, warning reflector unit or approved compliant sign.
6. The exterior of the drum body shall have a minimum of four alternating orange and white retroreflective circumferential stripes not less than 4 inches nor greater than 8 inches in width. Any non-reflectorized space between any two adjacent stripes shall not exceed 2 inches in width.
7. Bases shall have a maximum width of 36 inches, a maximum height of 4 inches, and a minimum of two footholds of sufficient size to allow base to be held down while separating the drum body from the base.
8. Plastic drums shall be constructed of ultra-violet stabilized, orange, high-density polyethylene (HDPE) or other approved material.
9. Drum body shall have a maximum unballasted weight of 11 lbs.
10. Drum and base shall be marked with manufacturer's name and model number.

RETROREFLECTIVE SHEETING

1. The stripes used on drums shall be constructed of sheeting meeting the color and retroreflectivity requirements of Departmental Materials Specification DMS-8300, "Sign Face Materials." Type A reflective sheeting shall be supplied unless otherwise specified in the plans.
2. The sheeting shall be suitable for use on and shall adhere to the drum surface such that, upon vehicular impact, the sheeting shall remain adhered in-place and exhibit no delaminating, cracking, or loss of retroreflectivity other than that loss due to abrasion of the sheeting surface.

BALLAST

1. Unballasted bases shall be large enough to hold up to 50 lbs. of sand. This base, when filled with the ballast material, should weigh between 35 lbs (minimum) and 50 lbs (maximum). The ballast may be sand in one to three sandbags separate from the base, sand in a sand-filled plastic base, or other ballasting devices as approved by the Engineer. Stacking of sandbags will be allowed, however height of sandbags above pavement surface may not exceed 12 inches.
2. Bases with built-in ballast shall weigh between 40 lbs. and 50 lbs. Built-in ballast can be constructed of an integral crumb rubber base or a solid rubber base.
3. Recycled truck tire sidewalls may be used for ballast on drums approved for this type of ballast on the CWZTCD list.
4. The ballast shall not be heavy objects, water, or any material that would become hazardous to motorists, pedestrians, or workers when the drum is struck by a vehicle.
5. When used in regions susceptible to freezing, drums shall have drainage holes in the bottoms so that water will not collect and freeze becoming a hazard when struck by a vehicle.
6. Ballast shall not be placed on top of drums.
7. Adhesives may be used to secure base of drums to pavement.

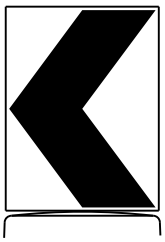

18" x 24" Sign
(Maximum Sign Dimension)
Chevron CW1-8, Opposing Traffic Lane Divider, Driveway sign D70a, Keep Right R4 series or other signs as approved by Engineer

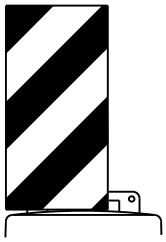

12" x 24"
Vertical Panel
mount with diagonals sloping down towards travel way

Plywood, Aluminum or Metal sign substrates shall NOT be used on plastic drums

SIGNS, CHEVRONS, AND VERTICAL PANELS MOUNTED ON PLASTIC DRUMS

1. Signs used on plastic drums shall be manufactured using substrates listed on the CWZTCD.
2. Chevrons and other work zone signs with an orange background shall be manufactured with Type B_{FL} or Type C_{FL} Orange sheeting meeting the color and retroreflectivity requirements of DMS-8300, "Sign Face Material," unless otherwise specified in the plans.
3. Vertical Panels shall be manufactured with orange and white sheeting meeting the requirements of DMS-8300 Type A Diagonal stripes on Vertical Panels shall slope down toward the intended traveled lane.
4. Other sign messages (text or symbolic) may be used as approved by the Engineer. Sign dimensions shall not exceed 18 inches in width or 24 inches in height, except for the R9 series signs discussed in note 8 below.
5. Signs shall be installed using a 1/2 inch bolt (nominal) and nut, two washers, and one locking washer for each connection.
6. Mounting bolts and nuts shall be fully engaged and adequately torqued. Bolts should not extend more than 1/2 inch beyond nuts.
7. Chevrons may be placed on drums on the outside of curves, on merging tapers or on shifting tapers. When used in these locations they may be placed on every drum or spaced not more than on every third drum. A minimum of three (3) should be used at each location called for in the plans.
8. R9-9, R9-10, R9-11 and R9-11a Sidewalk Closed signs which are 24 inches wide may be mounted on plastic drums, with approval of the Engineer.

DISCLAIMER:
The use of this standard is governed by the "Texas Engineering Practice Act". No warranty of any kind is made by TxDOT for any purpose whatsoever. TxDOT assumes no responsibility for the conversion of this standard to other formats or for incorrect results or damages resulting from its use.

Texas Department of Transportation

Traffic Operations Division Standard

BARRICADE AND CONSTRUCTION CHANNELIZING DEVICES

BC(8)-14

FILE: bcsm-14.dgn	DN: TxDOT	CK: TxDOT	DW: TxDOT	CK: TxDOT
© TxDOT November 2002	CONT	SECT	JOB	HIGHWAY
REVISIONS				
4-03 7-13	DIST		COUNTY	SHEET NO.
9-07 8-14				

DATE:
FILE: Revised Addendum 02 Concrete Parking Lot

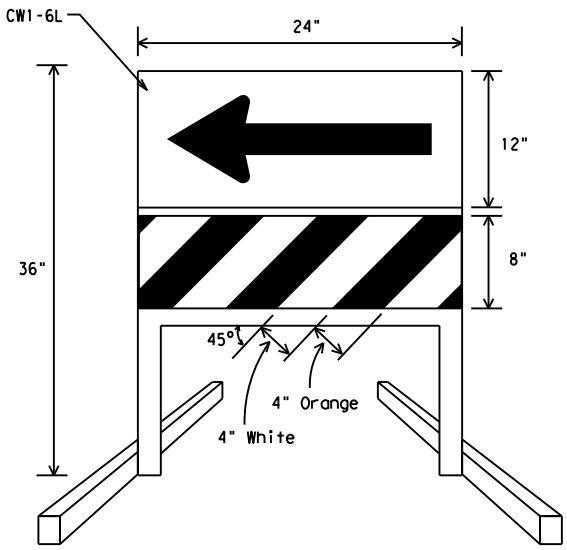

DIRECTION INDICATOR BARRICADE

1. The Direction Indicator Barricade may be used in tapers, transitions, and other areas where specific directional guidance to drivers is necessary.
2. If used, the Direction Indicator Barricade should be used in series to direct the driver through the transition and into the intended travel lane.
3. The Direction Indicator Barricade shall consist of One-Direction Large Arrow (CW1-6) sign in the size shown with a black arrow on a background of Type B_{FL} or Type C_{FL} Orange retroreflective sheeting above a rail with Type A retroreflective sheeting in alternating 4" white and orange stripes sloping downward at an angle of 45 degrees in the direction road users are to pass. Sheeting types shall be as per DMS 8300.
4. Double arrows on the Direction Indicator Barricade will not be allowed.
5. Approved manufacturers are shown on the CWZTCD List. Ballast shall be as approved by the manufacturers instructions.

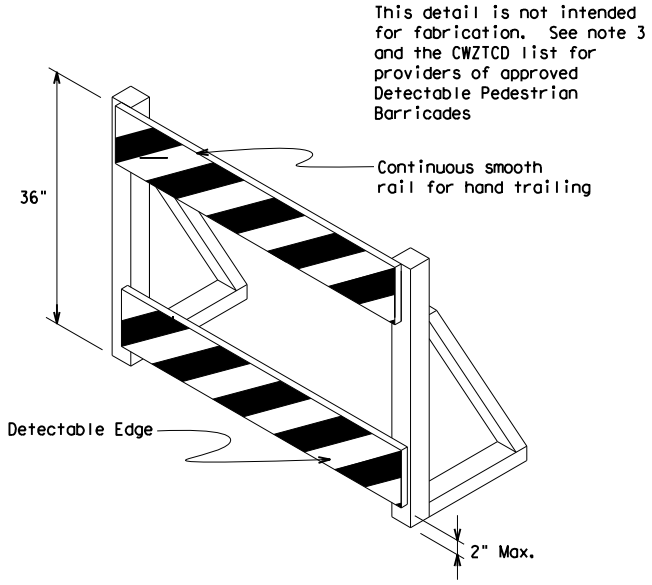

DETECTABLE PEDESTRIAN BARRICADES

1. When existing pedestrian facilities are disrupted, closed, or relocated in a TTC zone, the temporary facilities shall be detectable and include accessibility features consistent with the features present in the existing pedestrian facility.
2. Where pedestrians with visual disabilities normally use the closed sidewalk, a device that is detectable by a person with a visual disability traveling with the aid of a long cane shall be placed across the full width of the closed sidewalk.
3. Detectable pedestrian barricades similar to the one pictured above, longitudinal channelizing devices, some concrete barriers, and wood or chain link fencing with a continuous detectable edging can satisfactorily delineate a pedestrian path.
4. Tape, rope, or plastic chain strung between devices are not detectable, do not comply with the design standards in the "Americans with Disabilities Act Accessibility Guidelines for Buildings and Facilities (ADAAG)" and should not be used as a control for pedestrian movements.
5. Warning lights shall not be attached to detectable pedestrian barricades.
6. Detectable pedestrian barricades may use 8" nominal barricade rails as shown on BC(10) provided that the top rail provides a smooth continuous rail suitable for hand trailing with no splinters, burrs, or sharp edges.

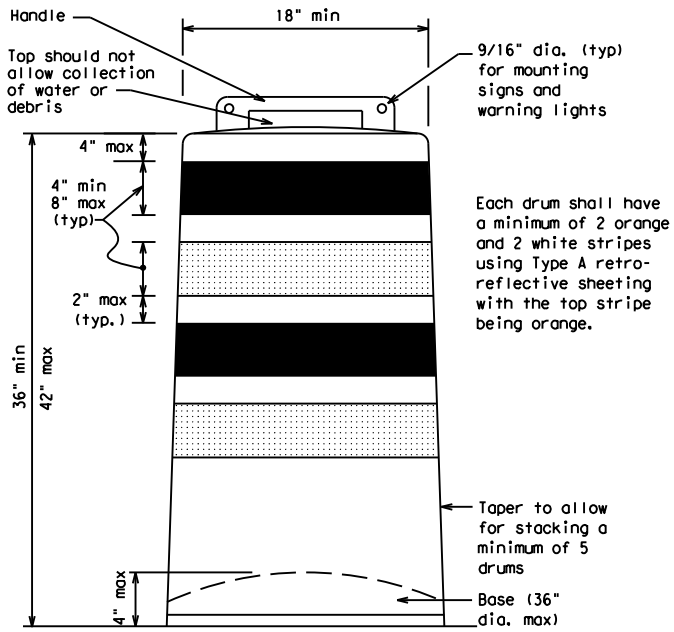

SHEET 18 OF 29

Texas Department of Transportation

Traffic Operations Division Standard

BARRICADE AND CONSTRUCTION CHANNELIZING DEVICES

BC(8)-14

FILE: bcsm-14.dgn	DN:	CK:	DW:	CK:
© TxDOT November 2002	CONT	SECT	JOB	HIGHWAY
REVISIONS				
4-03 7-13	DIST		COUNTY 29	SHEET NO.
9-07 8-14				

DATE:
FILE:
Revised Addendum 02 Concrete Parking Lot

DISCLAIMER:
The use of this standard is governed by the "Texas Engineering Practice Act". No warranty of any kind is made by TxDOT for any purpose whatsoever. TxDOT assumes no responsibility for the conversion of this standard to other formats or for incorrect results or damages resulting from its use.

DATE:
FILE:

Revised Addendum 02 Concrete Parking

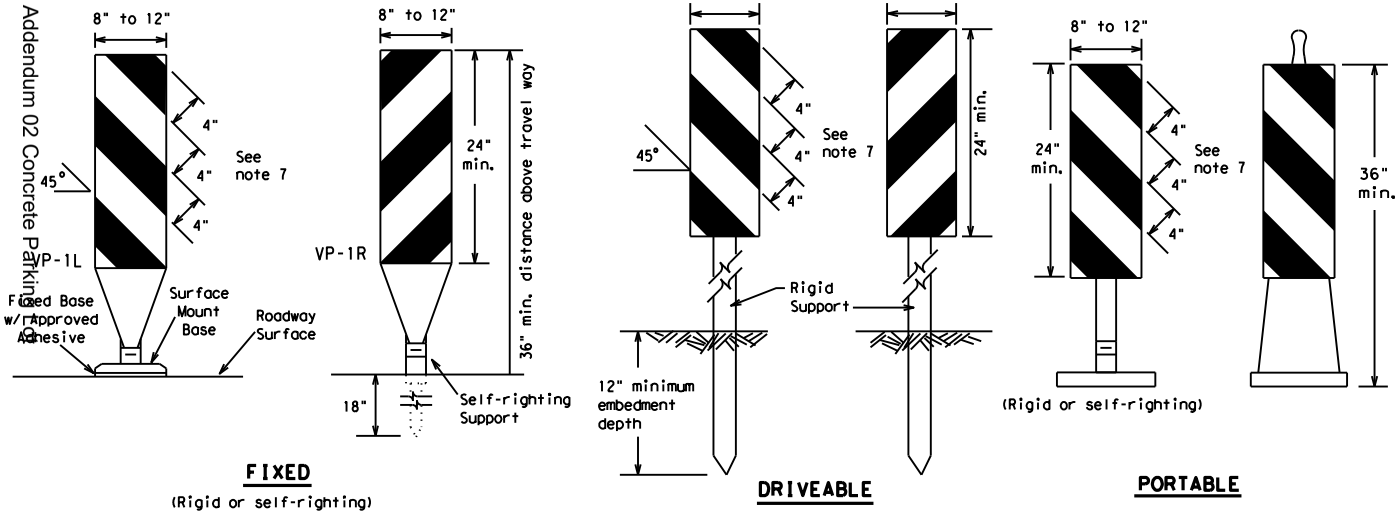

FIXED
(Rigid or self-righting)

DRIVEABLE

PORTABLE

1. Vertical Panels (VP's) are normally used to channelize traffic or divide opposing lanes of traffic.
2. VP's may be used in daytime or nighttime situations. They may be used at the edge of shoulder drop-offs and other areas such as lane transitions where positive daytime and nighttime delineation is required. The Engineer/Inspector shall refer to the Roadway Design Manual Appendix B "Treatment of Pavement Drop-offs in Work Zones" for additional guidelines on the use of VP's for drop-offs.
3. VP's should be mounted back to back if used at the edge of cuts adjacent to two-way two lane roadways. Stripes are to be reflective orange and reflective white and should always slope downward toward the travel lane.
4. VP's used on expressways and freeways or other high speed roadways, may have more than 270 square inches of retroreflective area facing traffic.
5. Self-righting supports are available with portable base. See "Compliant Work Zone Traffic Control Devices List" (CWZTCD).
6. Sheeting for the VP's shall be retroreflective Type A conforming to Departmental Material Specification DMS-8300, unless noted otherwise.
7. Where the height of reflective material on the vertical panel is 36 inches or greater, a panel stripe of 6 inches shall be used.

VERTICAL PANELS (VPs)

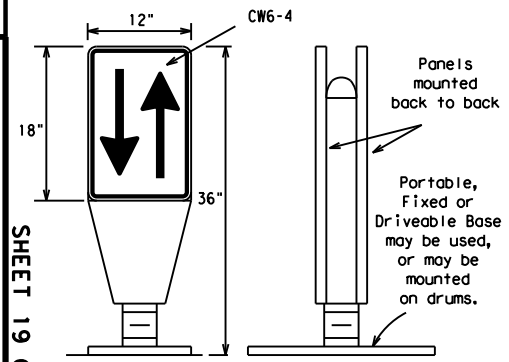

1. Opposing Traffic Lane Dividers (OTLD) are delineation devices designed to convert a normal one-way roadway section to two-way operation. OTLD's are used on temporary centerlines. The upward and downward arrows on the sign's face indicate the direction of traffic on either side of the divider. The base is secured to the pavement with an adhesive or rubber weight to minimize movement caused by a vehicle impact or wind gust.
2. The OTLD may be used in combination with 42" cones or VPs.
3. Spacing between the OTLD shall not exceed 500 feet. 42" cones or VPs placed between the OTLD's should not exceed 100 foot spacing.
4. The OTLD shall be orange with a black non-reflective legend. Sheeting for the OTLD shall be retroreflective Type B_{FL} or Type C_{FL} conforming to Departmental Material Specification DMS-8300, unless noted otherwise. The legend shall meet the requirements of DMS-8300.

OPPOSING TRAFFIC LANE DIVIDERS (OTLD)

Posted Speed *	Formula	Minimum Desirable Taper Lengths **			Suggested Maximum Spacing of Channelizing Devices	
		10' Offset	11' Offset	12' Offset	On a Taper	On a Tangent
30	$L = \frac{WS^2}{60}$	150'	165'	180'	30'	60'
35		205'	225'	245'	35'	70'
40		265'	295'	320'	40'	80'
45	L = WS	450'	495'	540'	45'	90'
50		500'	550'	600'	50'	100'
55		550'	605'	660'	55'	110'
60		600'	660'	720'	60'	120'
65		650'	715'	780'	65'	130'
70		700'	770'	840'	70'	140'
75		750'	825'	900'	75'	150'
80		800'	880'	960'	80'	160'

** Taper lengths have been rounded off.
L=Length of Taper (FT.) W=Width of Offset (FT.)
S=Posted Speed (MPH)

SUGGESTED MAXIMUM SPACING OF CHANNELIZING DEVICES AND MINIMUM DESIRABLE TAPER LENGTHS

Texas Department of Transportation

Traffic Operations Division Standard

BARRICADE AND CONSTRUCTION CHANNELIZING DEVICES

BC(9)-14

FILE: bcsm-14.dgn	DN: TxDOT	CK: TxDOT	DW: TxDOT	CK: TxDOT	
© TxDOT November 2002	CONT	SECT	JOB	HIGHWAY	
REVISIONS 9-07 8-14 7-13	DIST		COUNT 30		SHEET NO.

DATE:
FILE:

Revised Addendum 02 Concrete Parking Lot

Posted Speed *	Formula	Minimum Desirable Taper Lengths **			Suggested Maximum Spacing of Channelizing Devices	
		10' Offset	11' Offset	12' Offset	On a Taper	On a Tangent
30	$L = \frac{WS^2}{60}$	150'	165'	180'	30'	60'
35		205'	225'	245'	35'	70'
40		265'	295'	320'	40'	80'
45	L = WS	450'	495'	540'	45'	90'
50		500'	550'	600'	50'	100'
55		550'	605'	660'	55'	110'
60		600'	660'	720'	60'	120'
65		650'	715'	780'	65'	130'
70		700'	770'	840'	70'	140'
75		750'	825'	900'	75'	150'
80		800'	880'	960'	80'	160'

** Taper lengths have been rounded off.
L=Length of Taper (FT.) W=Width of Offset (FT.)
S=Posted Speed (MPH)

SUGGESTED MAXIMUM SPACING OF CHANNELIZING DEVICES AND MINIMUM DESIRABLE TAPER LENGTHS

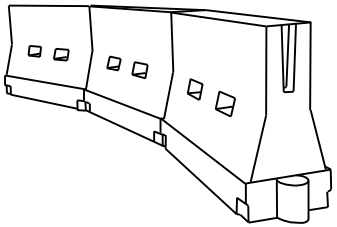

LONGITUDINAL CHANNELIZING DEVICES (LCD)

1. LCDs are crashworthy, lightweight, deformable devices that are highly visible, have good target value and can be connected together. They are not designed to contain or redirect a vehicle on impact.
2. LCDs may be used instead of a line of cones or drums.
3. LCDs shall be placed in accordance to application and installation requirements specific to the device, and used only when shown on the CWZTCD list.
4. LCDs should not be used to provide positive protection for obstacles, pedestrians or workers.
5. LCDs shall be supplemented with retroreflective delineation as required for temporary barriers on BC(7) when placed roughly parallel to the travel lanes.
6. LCDs used as barricades placed perpendicular to traffic should have at least one row of reflective sheeting meeting the requirements for barricade rails as shown on BC(10) placed near the top of the LCD along the full length of the device.

WATER BALLASTED SYSTEMS USED AS BARRIERS

1. Water ballasted systems used as barriers shall not be used solely to channelize road users, but also to protect the work space per the appropriate NCHRP 350 crashworthiness requirements based on roadway speed and barrier application.
2. Water ballasted systems used to channelize vehicular traffic shall be supplemented with retroreflective delineation or channelizing devices to improve daytime/nighttime visibility. They may also be supplemented with pavement markings.
3. Water ballasted systems used as barriers shall be placed in accordance to application and installation requirements specific to the device, and used only when shown on the CWZTCD list.
4. Water ballasted systems used as barriers should not be used for a merging taper except in low speed (less than 45 MPH) urban areas. When used on a taper in a low speed urban area, the taper shall be delineated and the taper length should be designed to optimize road user operations considering the available geometric conditions.
5. When water ballasted systems used as barriers have blunt ends exposed to traffic, they should be attenuated as per manufacturer recommendations or flared to a point outside the clear zone.

If used to channelize pedestrians, longitudinal channelizing devices or water ballasted systems must have a continuous detectable bottom for users of long canes and the top of the unit shall not be less than 32 inches in height.

HOLLOW OR WATER BALLASTED SYSTEMS USED AS LONGITUDINAL CHANNELIZING DEVICES OR BARRIERS

Texas Department of Transportation

Traffic Operations Division Standard

SHEET 20 OF 29

BARRICADE AND CONSTRUCTION CHANNELIZING DEVICES

BC(9)-14

FILE: bcsm-14.dgn	DN: TxDOT	CK: TxDOT	DW: TxDOT	CK: TxDOT
© TxDOT November 2002	CONT	SECT	JOB	HIGHWAY
REVISIONS 9-07 8-14 7-13	DIST	COUNTY 31	SHEET NO.

DISCLAIMER:
The use of this standard is governed by the "Texas Engineering Practice Act". No warranty of any kind is made by TxDOT for any purpose whatsoever. TxDOT assumes no responsibility for the conversion of this standard to other formats or for incorrect results or damages resulting from its use.

DATE:
FILE:

Revised Addendum 02 Concrete Parking Lot

Posted Speed *	Formula	Minimum Desirable Taper Lengths **			Suggested Maximum Spacing of Channelizing Devices	
		10' Offset	11' Offset	12' Offset	On a Taper	On a Tangent
30	$L = \frac{WS^2}{60}$	150'	165'	180'	30'	60'
35		205'	225'	245'	35'	70'
40		265'	295'	320'	40'	80'
45	L = WS	450'	495'	540'	45'	90'
50		500'	550'	600'	50'	100'
55		550'	605'	660'	55'	110'
60		600'	660'	720'	60'	120'
65		650'	715'	780'	65'	130'
70		700'	770'	840'	70'	140'
75		750'	825'	900'	75'	150'
80		800'	880'	960'	80'	160'

** Taper lengths have been rounded off.
L=Length of Taper (FT.) W=Width of Offset (FT.)
S=Posted Speed (MPH)

SUGGESTED MAXIMUM SPACING OF CHANNELIZING DEVICES AND MINIMUM DESIRABLE TAPER LENGTHS

GENERAL NOTES

1. Work Zone channelizing devices illustrated on this sheet (BC(9)) may be installed in close proximity to traffic and are suitable for use on high or low speed roadways. The Engineer/Inspector shall ensure that spacing and placement is uniform and in accordance with the "Texas Manual on Uniform Traffic Control Devices" (TMUTCD).
2. Channelizing devices shown on this sheet (BC(9)) may have a driveable, fixed or portable base. The requirement for self-righting channelizing devices must be specified in the General Notes or other plan sheets.
3. Channelizing devices on self-righting supports should be used in work zone areas where channelizing devices are frequently impacted by errant vehicles or vehicle related wind gusts making alignment of the channelizing devices difficult to maintain. Locations of these devices shall be detailed elsewhere in the plans. These devices shall conform to the TMUTCD and the "Compliant Work Zone Traffic Control Devices List" (CWZTCD).
4. The Contractor shall maintain devices in a clean condition and replace damaged, nonreflective, faded, or broken devices and bases as required by the Engineer/Inspector. The Contractor shall be required to maintain proper device spacing and alignment.
5. Portable bases shall be fabricated from virgin and/or recycled rubber. The portable bases shall weigh a minimum of 30 lbs.
6. Pavement surfaces shall be prepared in a manner that ensures proper bonding between the adhesives, the fixed mount bases and the pavement surface. Adhesives shall be prepared and applied according to the manufacturer's recommendations.
7. The installation and removal of channelizing devices shall not cause detrimental effects to the final pavement surfaces, including pavement surface discoloration or surface integrity. Driveable bases shall not be permitted on final pavement surfaces. The Engineer/Inspector shall approve all application and removal procedures of fixed bases.

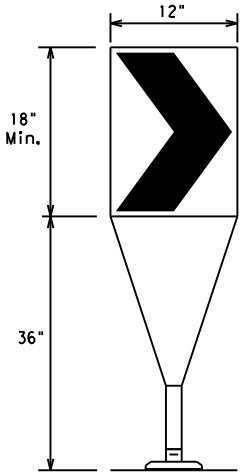

Fixed Base w/ Approved Adhesive (Driveable Base, or Flexible Support can be used)

1. The chevron shall be a vertical rectangle with a minimum size of 12 by 18 inches.
2. Chevrons are intended to give notice of a sharp change of alignment with the direction of travel and provide additional emphasis and guidance for vehicle operators with regard to changes in horizontal alignment of the roadway.
3. Chevrons, when used, shall be erected on the outside of a sharp curve or turn, or on the far side of an intersection. They shall be in line with and at right angles to approaching traffic. Spacing should be such that the motorist always has three in view, until the change in alignment eliminates its need.
4. To be effective, the chevron should be visible for at least 500 feet.
5. Chevrons shall be orange with a black nonreflective legend. Sheeting for the chevron shall be retroreflective Type B_{FL} or Type C_{FL} conforming to Departmental Material Specification DMS-8300, unless noted otherwise. The legend shall meet the requirements of DMS-8300.
6. For Long Term Stationary use on tapers or transitions on freeways and divided highways self-righting chevrons may be used to supplement plastic drums but not to replace plastic drums.

CHEVRONS

Texas Department of Transportation

Traffic Operations Division Standard

SHEET 21 OF 29

BARRICADE AND CONSTRUCTION CHANNELIZING DEVICES

BC(9)-14

FILE: bcsm-14.dgn	DN: TxDOT	CK: TxDOT	DW: TxDOT	CK: TxDOT
© TxDOT November 2002	CONT	SECT	JOB	HIGHWAY
REVISIONS 9-07 8-14 7-13	DIST	COUNT 32	SHEET NO.

TYPE 3 BARRICADES

1. Refer to the Compliant Work Zone Traffic Control Devices List (CWZTCD) for details of the Type 3 Barricades and a list of all materials used in the construction of Type 3 Barricades.
2. Type 3 Barricades shall be used at each end of construction projects closed to all traffic.
3. Barricades extending across a roadway should have stripes that slope downward in the direction toward which traffic must turn in detouring. When both right and left turns are provided, the chevron striping may slope downward in both directions from the center of the barricade. Where no turns are provided at a closed road striping should slope downward in both directions toward the center of roadway.
4. Striping of rails, for the right side of the roadway, should slope downward to the left. For the left side of the roadway, striping should slope downward to the right.
5. Identification markings may be shown only on the back of the barricade rails. The maximum height of letters and/or company logos used for identification shall be 1".
6. Barricades shall not be placed parallel to traffic unless an adequate clear zone is provided.
7. Warning lights shall NOT be installed on barricades.
8. Where barricades require the use of weights to keep from turning over, the use of sandbags with dry, cohesionless sand is recommended. The sandbags will be tied shut to keep the sand from spilling and to maintain a constant weight. Sand bags shall not be stacked in a manner that covers any portion of a barricade rails reflective sheeting. Rock, concrete, iron, steel or other solid objects will NOT be permitted. Sandbags should weigh a minimum of 35 lbs and a maximum of 50 lbs. Sandbags shall be made of a durable material that tears upon vehicular impact. Rubber (such as tire inner tubes) shall not be used for sandbags. Sandbags shall only be placed along or upon the base supports of the device and shall not be suspended above ground level or hung with rope, wire, chains or other fasteners.
9. Sheeting for barricades shall be retroreflective Type A conforming to Departmental Material Specification DMS-8300 unless otherwise noted.

Barricades shall NOT be used as a sign support.

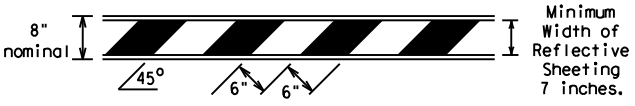

TYPICAL STRIPING DETAIL FOR BARRICADE RAIL

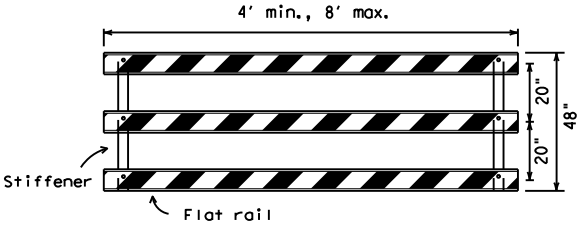

Stiffener may be inside or outside of support, but no more than 2 stiffeners shall be allowed on one barricade.

TYPICAL PANEL DETAIL FOR SKID OR POST TYPE BARRICADES

CONES

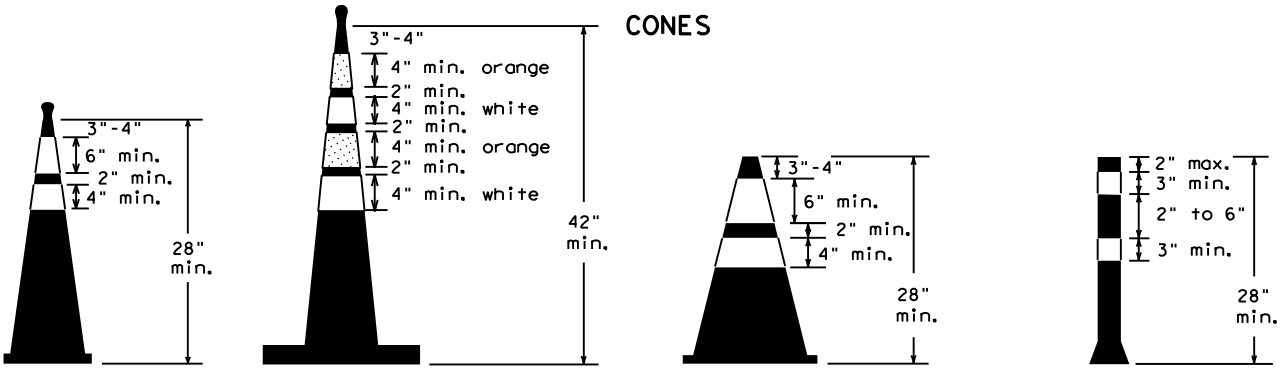

Two-Piece cones | One-Piece cones | Tubular Marker

28" Cones shall have a minimum weight of 9 1/2 lbs.

42" 2-piece cones shall have a minimum weight of 30 lbs. including base.

1. Traffic cones and tubular markers shall be predominantly orange, and meet the height and weight requirements shown above.
2. One-piece cones have the body and base of the cone molded in one consolidated unit. Two-piece cones have a cone shaped body and a separate rubber base, or ballast, that is added to keep the device upright and in place.
3. Two-piece cones may have a handle or loop extending up to 8" above the minimum height shown, in order to aid in retrieving the device.
4. Cones or tubular markers used at night shall have white or white and orange reflective bands as shown above. The reflective bands shall have a smooth, sealed outer surface and meet the requirements of Departmental Material Specification DMS-8300 Type A.
5. 28" cones and tubular markers are generally suitable for short duration and short-term stationary work as defined on BC(4). These should not be used for intermediate-term or long-term stationary work unless personnel is on-site to maintain them in their proper upright position.
6. 42" two-piece cones, vertical panels or drums are suitable for all work zone durations.
7. Cones or tubular markers used on each project should be of the same size and shape.

Texas Department of Transportation

Traffic Operations Division Standard

BARRICADE AND CONSTRUCTION CHANNELIZING DEVICES

BC(10)-14

FILE: bcsm-14.dgn	DN: TxDOT	CK: TxDOT	DW: TxDOT	CK: TxDOT
© TxDOT November 2002	CONT	SECT	JOB	HIGHWAY
REVISIONS 9-07 8-14 7-13	DIST	COUNTY 33		SHEET NO.

DATE:
FILE: Revised Addendum 02 Concrete Parking Lot

Each roadway of a divided highway shall be barricaded in the same manner.

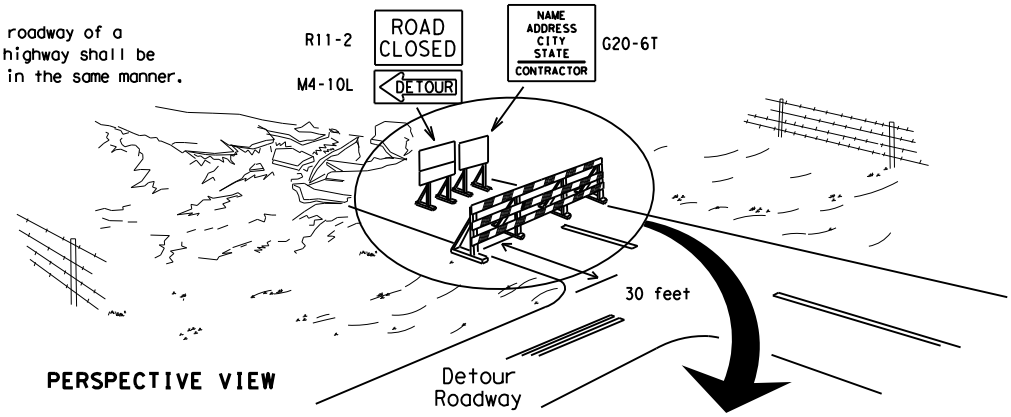

PERSPECTIVE VIEW

The three rails on Type 3 barricades shall be reflectorized orange and reflective white stripes on one side facing one-way traffic and both sides for two-way traffic.

Barricade striping should slant downward in the direction of detour.

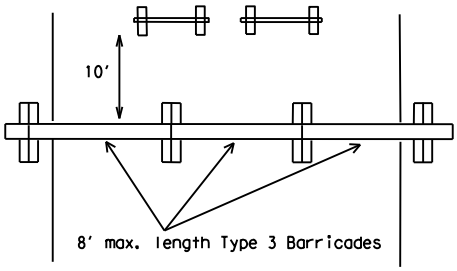

PLAN VIEW

1. Signs should be mounted on independent supports at a 7 foot mounting height in center of roadway. The signs should be a minimum of 10 feet behind Type 3 Barricades.
2. Advance signing shall be as specified elsewhere in the plans.

TYPE 3 BARRICADE (POST AND SKID) TYPICAL APPLICATION

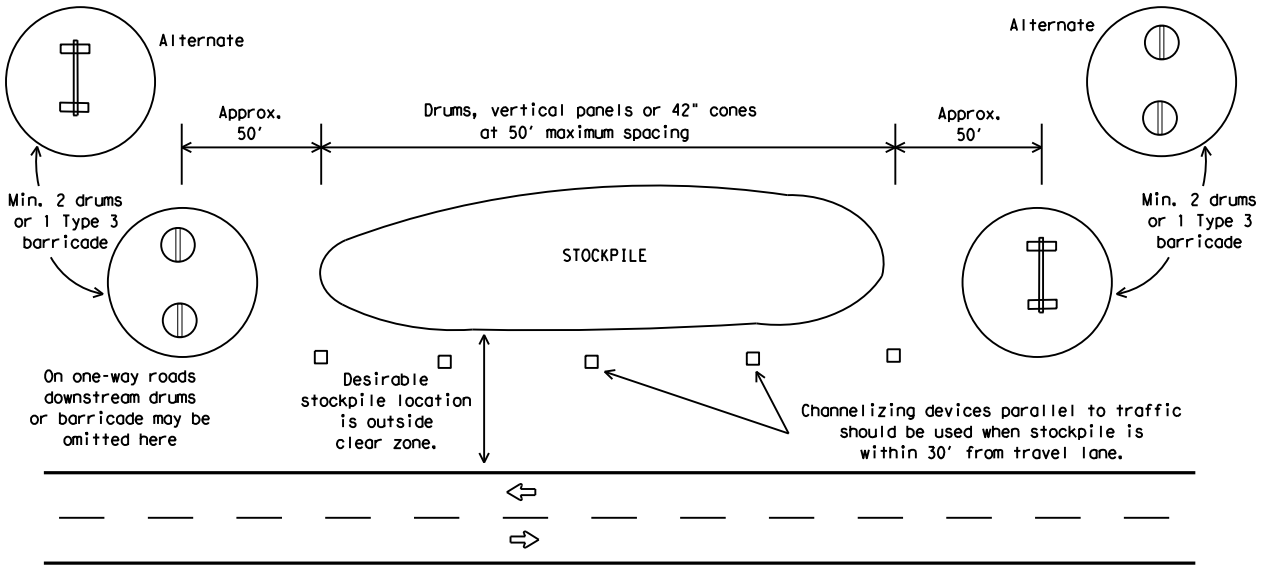

TRAFFIC CONTROL FOR MATERIAL STOCKPILES

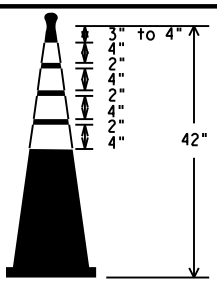

EDGELINE CHANNELIZER

THIS DEVICE SHALL NOT BE USED ON PROJECTS LET AFTER MARCH 2014.

1. This device is intended only for use in place of a vertical panel to channelize traffic by indicating the edge of the travel lane. It is not intended to be used in transitions or tapers.
2. This device shall not be used to separate lanes of traffic (opposing or otherwise) or warn of objects.
3. This device is based on a 42 inch, two-piece cone with an alternate striping pattern: four 4 inch retroreflective bands, with an approximate 2 inch gap between bands. The color of the band should correspond to the color of the edgeline (yellow for left edgeline, white for right edgeline) for which the device is substituted or for which it supplements. The reflectorized bands shall be retroreflective Type A conforming to Departmental Material Specification DMS-8300, unless otherwise noted.
4. The base must weigh a minimum of 30 lbs.

SHEET 23 OF 29

Texas Department of Transportation

Traffic Operations Division Standard

BARRICADE AND CONSTRUCTION CHANNELIZING DEVICES

BC(10)-14

FILE: bcsm-14.dgn	DN: TxDOT	CK: TxDOT	DW: TxDOT	CK: TxDOT
© TxDOT November 2002	CONT	SECT	JOB	HIGHWAY
REVISIONS 9-07 8-14 7-13	DIST	COUNTY		SHEET NO.

DISCLAIMER: The use of this standard is governed by the "Texas Engineering Practice Act". No warranty of any kind is made by TxDOT for any purpose whatsoever. TxDOT assumes no responsibility for the conversion of this standard to other formats or for incorrect results or damages resulting from its use.

DATE:
FILE:

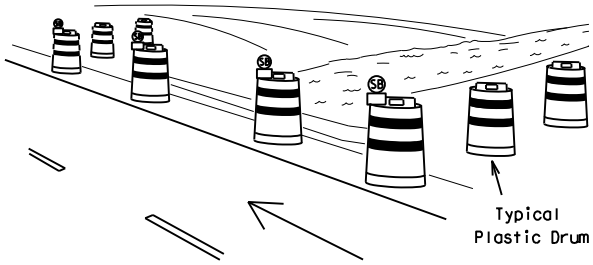

PERSPECTIVE VIEW

1. Where positive redirectional capability is provided, drums may be omitted.
2. Plastic construction fencing may be used with drums for safety as required in the plans.
3. Vertical Panels on flexible support may be substituted for drums when the shoulder width is less than 4 feet.
4. When the shoulder width is greater than 12 feet, steady-burn lights may be omitted if drums are used.
5. Drums must extend the length of the culvert widening.

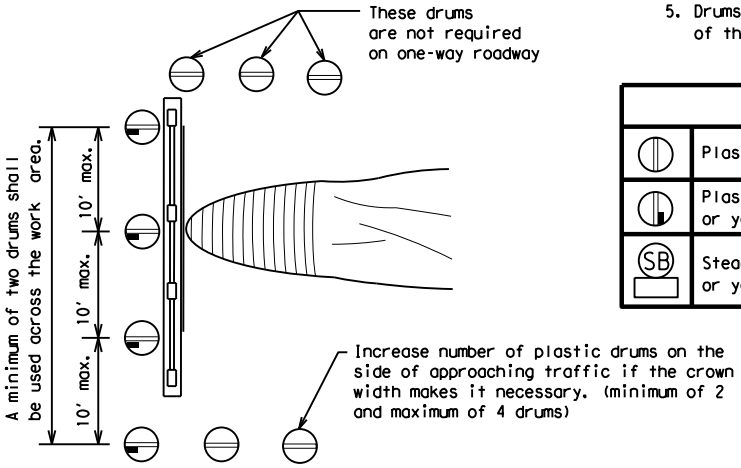

PLAN VIEW

LEGEND	
	Plastic drum
	Plastic drum with steady burn light or yellow warning reflector
SB	Steady burn warning light or yellow warning reflector

CULVERT WIDENING OR OTHER ISOLATED WORK WITHIN THE PROJECT LIMITS

Texas Department of Transportation

Traffic Operations Division Standard

BARRICADE AND CONSTRUCTION CHANNELIZING DEVICES

BC(10)-14

FILE: bcsm-14.dgn	DN: TxDOT	CK: TxDOT	DW: TxDOT	CK: TxDOT
© TxDOT November 2002	CONT	SECT	JOB	HIGHWAY
REVISIONS 9-07 8-14 7-13	DIST	COUNTY 35		SHEET NO.

DATE:
FILE: Revised Addendum 02 Concrete Parking Lot

WORK ZONE PAVEMENT MARKINGS

GENERAL

1. The Contractor shall be responsible for maintaining work zone and existing pavement markings, in accordance with the standard specifications and special provisions, on all roadways open to traffic within the CSJ limits unless otherwise stated in the plans.
2. Color, patterns and dimensions shall be in conformance with the "Texas Manual on Uniform Traffic Control Devices" (TMUTCD).
3. Additional supplemental pavement marking details may be found in the plans or specifications.
4. Pavement markings shall be installed in accordance with the TMUTCD and as shown on the plans.
5. When short term markings are required on the plans, short term markings shall conform with the TMUTCD, the plans and details as shown on the Standard Plan Sheet WZ(STPM).
6. When standard pavement markings are not in place and the roadway is opened to traffic, DO NOT PASS signs shall be erected to mark the beginning of the sections where passing is prohibited and PASS WITH CARE signs at the beginning of sections where passing is permitted.
7. All work zone pavement markings shall be installed in accordance with Item 662, "Work Zone Pavement Markings."

RAISED PAVEMENT MARKERS

1. Raised pavement markers are to be placed according to the patterns on BC(12).
2. All raised pavement markers used for work zone markings shall meet the requirements of Item 672, "RAISED PAVEMENT MARKERS" and Departmental Material Specification DMS-4200 or DMS-4300.

PREFABRICATED PAVEMENT MARKINGS

1. Removable prefabricated pavement markings shall meet the requirements of DMS-8241.
2. Non-removable prefabricated pavement markings (foil back) shall meet the requirements of DMS-8240.

MAINTAINING WORK ZONE PAVEMENT MARKINGS

1. The Contractor will be responsible for maintaining work zone pavement markings within the work limits.
2. Work zone pavement markings shall be inspected in accordance with the frequency and reporting requirements of work zone traffic control device inspections as required by Form 599.
3. The markings should provide a visible reference for a minimum distance of 300 feet during normal daylight hours and 160 feet when illuminated by automobile low-beam headlights at night, unless sight distance is restricted by roadway geometrics.
4. Markings failing to meet this criteria within the first 30 days after placement shall be replaced at the expense of the Contractor as per Specification Item 662.

REMOVAL OF PAVEMENT MARKINGS

1. Pavement markings that are no longer applicable, could create confusion or direct a motorist toward or into the closed portion of the roadway shall be removed or obliterated before the roadway is opened to traffic.
2. The above shall not apply to detours in place for less than three days, where flaggers and/or sufficient channelizing devices are used in lieu of markings to outline the detour route.
3. Pavement markings shall be removed to the fullest extent possible, so as not to leave a discernable marking. This shall be by any method approved by TxDOT Specification Item 677 for "Eliminating Existing Pavement Markings and Markers".
4. The removal of pavement markings may require resurfacing or seal coating portions of the roadway as described in Item 677.
5. Subject to the approval of the Engineer, any method that proves to be successful on a particular type pavement may be used.
6. Blast cleaning may be used but will not be required unless specifically shown in the plans.
7. Over-painting of the markings SHALL NOT BE permitted.
8. Removal of raised pavement markers shall be as directed by the Engineer.
9. Removal of existing pavement markings and markers will be paid for directly in accordance with Item 677, "ELIMINATING EXISTING PAVEMENT MARKINGS AND MARKERS," unless otherwise stated in the plans.
10. Black-out marking tape may be used to cover conflicting existing markings for periods less than two weeks when approved by the Engineer.

DEPARTMENTAL MATERIAL SPECIFICATIONS	
PAVEMENT MARKERS (REFLECTORIZED)	DMS-4200
TRAFFIC BUTTONS	DMS-4300
EPOXY AND ADHESIVES	DMS-6100
BITUMINOUS ADHESIVE FOR PAVEMENT MARKERS	DMS-6130
PERMANENT PREFABRICATED PAVEMENT MARKINGS	DMS-8240
TEMPORARY REMOVABLE, PREFABRICATED PAVEMENT MARKINGS	DMS-8241
TEMPORARY FLEXIBLE, REFLECTIVE ROADWAY MARKER TABS	DMS-8242

A list of prequalified reflective raised pavement markers, non-reflective traffic buttons, roadway marker tabs and other pavement markings can be found at the Material Producer List web address shown on BC(1).

DISCLAIMER:
The use of this standard is governed by the "Texas Engineering Practice Act". No warranty of any kind is made by TxDOT for any purpose whatsoever. TxDOT assumes no responsibility for the conversion of this standard to other formats or for incorrect results or damages resulting from its use.

Texas Department of Transportation — Traffic Operations Division Standard

BARRICADE AND CONSTRUCTION PAVEMENT MARKINGS

BC(11)-14

FILE: bcsm-14.dgn	DN: TxDOT	CK: TxDOT	DW: TxDOT	CK: TxDOT
© TxDOT February 1998	CONT	SECT	JOB	HIGHWAY
REVISIONS 2-98 11-02 7-13 1-02 9-07 8-14	DIST	COUNTY 36		SHEET NO.

DATE:
FILE: Revised Adobe Acrobat 9.02 Concrete Barrier.pdf

Temporary Flexible-Reflective Roadway Marker Tabs

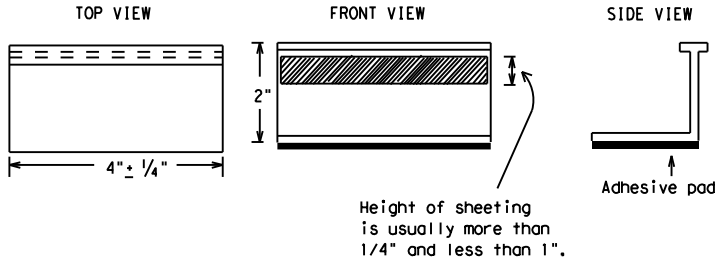

STAPLES OR NAILS SHALL NOT BE USED TO SECURE TEMPORARY FLEXIBLE-REFLECTIVE ROADWAY MARKER TABS TO THE PAVEMENT SURFACE

1. Temporary flexible-reflective roadway marker tabs used as guidemarks shall meet the requirements of DMS-8242.
2. Tabs detailed on this sheet are to be inspected and accepted by the Engineer or designated representative. Sampling and testing is not normally required, however at the option of the Engineer, either "A" or "B" below may be imposed to assure quality before placement on the roadway.
   A. Select five (5) or more tabs at random from each lot or shipment and submit to the Construction Division, Materials and Pavement Section to determine specification compliance.
   B. Select five (5) tabs and perform the following test. Affix five (5) tabs at 24 inch intervals on an asphaltic pavement in a straight line. Using a medium size passenger vehicle or pickup, run over the markers with the front and rear tires at a speed of 35 to 40 miles per hour, four (4) times in each direction. No more than one (1) out of the five (5) reflective surfaces shall be lost or displaced as a result of this test.
3. Small design variances may be noted between tab manufacturers.
4. See Standard Sheet WZ(STPM) for tab placement on new pavements. See Standard Sheet TCP(7-1) for tab placement on seal coat work.

RAISED PAVEMENT MARKERS USED AS GUIDEMARKS

1. Raised pavement markers used as guidemarks shall be from the approved product list, and meet the requirements of DMS-4200.
2. All temporary construction raised pavement markers provided on a project shall be of the same manufacturer.
3. Adhesive for guidemarks shall be bituminous material hot applied or butyl rubber pad for all surfaces, or thermoplastic for concrete surfaces.

Guidemarks shall be designated as:
YELLOW - (two amber reflective surfaces with yellow body).
WHITE - (one silver reflective surface with white body).

DEPARTMENTAL MATERIAL SPECIFICATIONS	
PAVEMENT MARKERS (REFLECTORIZED)	DMS-4200
TRAFFIC BUTTONS	DMS-4300
EPOXY AND ADHESIVES	DMS-6100
BITUMINOUS ADHESIVE FOR PAVEMENT MARKERS	DMS-6130
PERMANENT PREFABRICATED PAVEMENT MARKINGS	DMS-8240
TEMPORARY REMOVABLE, PREFABRICATED PAVEMENT MARKINGS	DMS-8241
TEMPORARY FLEXIBLE, REFLECTIVE ROADWAY MARKER TABS	DMS-8242

A list of prequalified reflective raised pavement markers, non-reflective traffic buttons, roadway marker tabs and other pavement markings can be found at the Material Producer List web address shown on BC(1).

DISCLAIMER:
The use of this standard is governed by the "Texas Engineering Practice Act". No warranty of any kind is made by TxDOT for any purpose whatsoever. TxDOT assumes no responsibility for the conversion of this standard to other formats or for incorrect results or damages resulting from its use.

Texas Department of Transportation — Traffic Operations Division Standard

BARRICADE AND CONSTRUCTION PAVEMENT MARKINGS

BC(11)-14

FILE: bcsm-14.dgn	DN: TxDOT	CK: TxDOT	DW: TxDOT	CK: TxDOT
© TxDOT February 1998	CONT	SECT	JOB	HIGHWAY
REVISIONS 2-98 11-02 7-13 1-02 9-07 8-14	DIST	COUNTY 37		SHEET NO.

DATE:
FILE: Revised Addendum 02 Concrete Parking Lot

DISCLAIMER:
The use of this standard is governed by the "Texas Engineering Practice Act". No warranty of any kind is made by TxDOT for any purpose whatsoever. TxDOT assumes no responsibility for the conversion of this standard to other formats or for incorrect results or damages resulting from its use.

DATE:
FILE:

Revised Addendum 02 Concrete Parking Lot

PAVEMENT MARKING PATTERNS

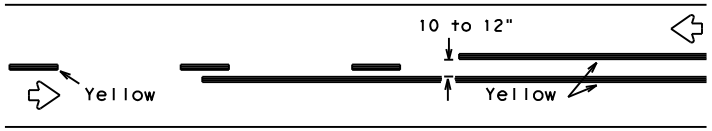

REFLECTORIZED PAVEMENT MARKINGS - PATTERN A

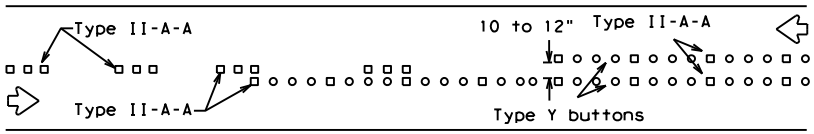

RAISED PAVEMENT MARKERS - PATTERN A

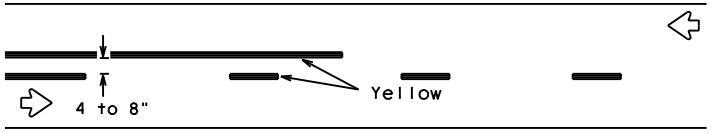

REFLECTORIZED PAVEMENT MARKINGS - PATTERN B

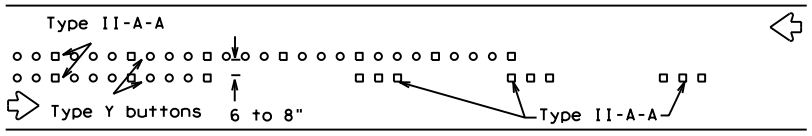

RAISED PAVEMENT MARKERS - PATTERN B

Pattern A is the TXDOT Standard, however Pattern B may be used if approved by the Engineer.
Prefabricated markings may be substituted for reflectorized pavement markings.

CENTER LINE & NO-PASSING ZONE BARRIER LINES FOR TWO-LANE, TWO-WAY HIGHWAYS

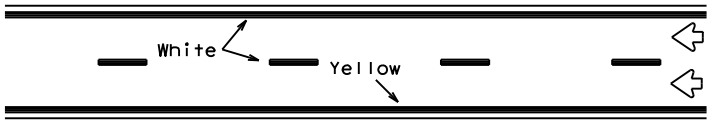

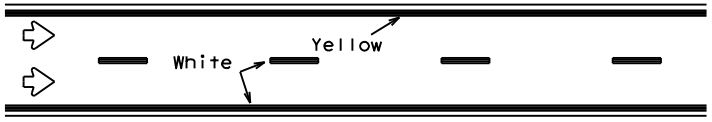

REFLECTORIZED PAVEMENT MARKINGS

Prefabricated markings may be substituted for reflectorized pavement markings.

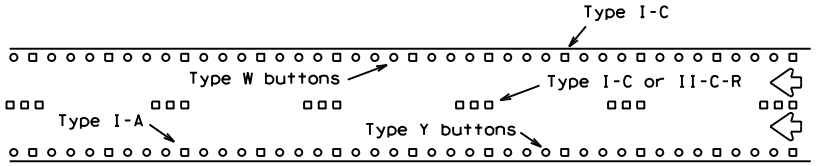

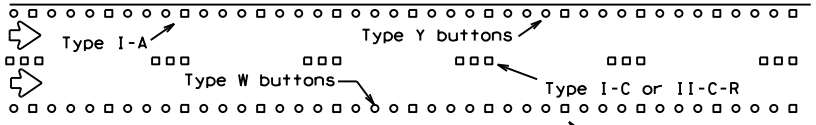

RAISED PAVEMENT MARKERS

EDGE & LANE LINES FOR DIVIDED HIGHWAY

Raised pavement markers used as standard pavement markings shall be from the approved products list and meet the requirements of Item 672 "RAISED PAVEMENT MARKERS."

Texas Department of Transportation

Traffic Operations Division Standard

SHEET 27 OF 29

BARRICADE AND CONSTRUCTION PAVEMENT MARKING PATTERNS

BC(12)-14

FILE: bcsm-14.dgn	DN: TxDOT	CK: TxDOT	DW: TxDOT	CK: TxDOT
© TxDOT February 1998	CONT	SECT	JOB	HIGHWAY
REVISIONS	DIST	COUNT 38	SHEET NO.
1-97 11-02 7-13			
2-98 9-07 8-14			

DISCLAIMER:
The use of this standard is governed by the "Texas Engineering Practice Act". No warranty of any kind is made by TxDOT for any purpose whatsoever. TxDOT assumes no responsibility for the conversion of this standard to other formats or for incorrect results or damages resulting from its use.

DATE:
FILE:

Revised Addendum 02 Concrete Parking Lot

PAVEMENT MARKING PATTERNS (Continued)

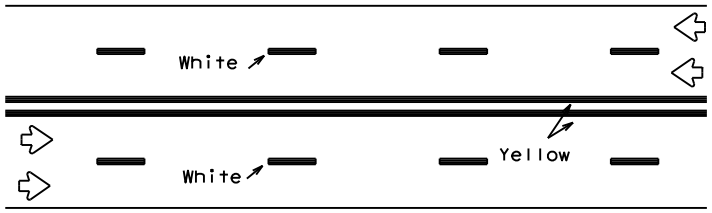

REFLECTORIZED PAVEMENT MARKINGS

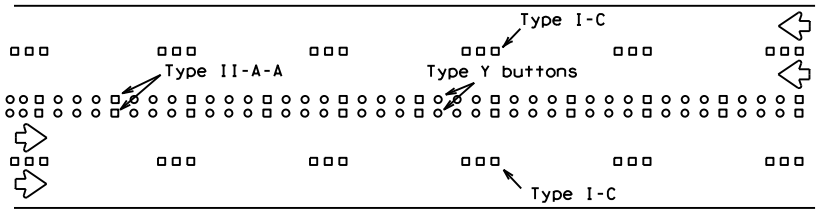

RAISED PAVEMENT MARKERS

Prefabricated markings may be substituted for reflectorized pavement markings.

LANE & CENTER LINES FOR MULTILANE UNDIVIDED HIGHWAYS

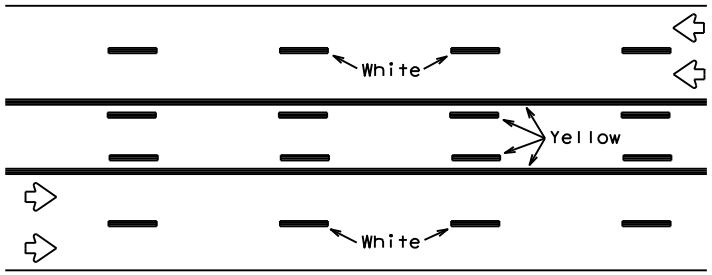

REFLECTORIZED PAVEMENT MARKINGS

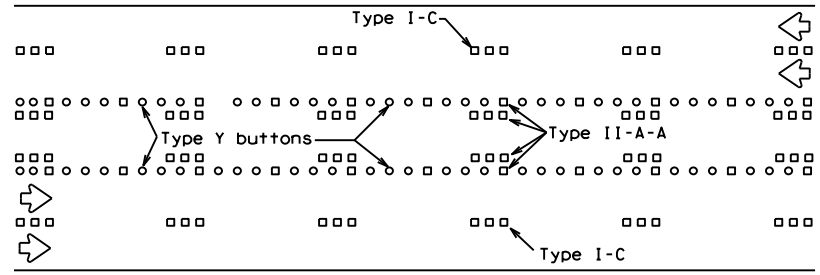

RAISED PAVEMENT MARKERS

Prefabricated markings may be substituted for reflectorized pavement markings.

TWO-WAY LEFT TURN LANE

Raised pavement markers used as standard pavement markings shall be from the approved products list and meet the requirements of Item 672 "RAISED PAVEMENT MARKERS."

Texas Department of Transportation

Traffic Operations Division Standard

SHEET 28 OF 29

BARRICADE AND CONSTRUCTION PAVEMENT MARKING PATTERNS

BC(12)-14

FILE: bcsm-14.dgn	DN: TxDOT	CK: TxDOT	DW: TxDOT	CK: TxDOT
©TxDOT February 1998	CONT	SECT	JOB	HIGHWAY
REVISIONS	DIST	COUNTY 39	SHEET NO.
1-97 11-02 7-13			
2-98 9-07 8-14			

STANDARD WORK ZONE PAVEMENT MARKINGS DETAILS

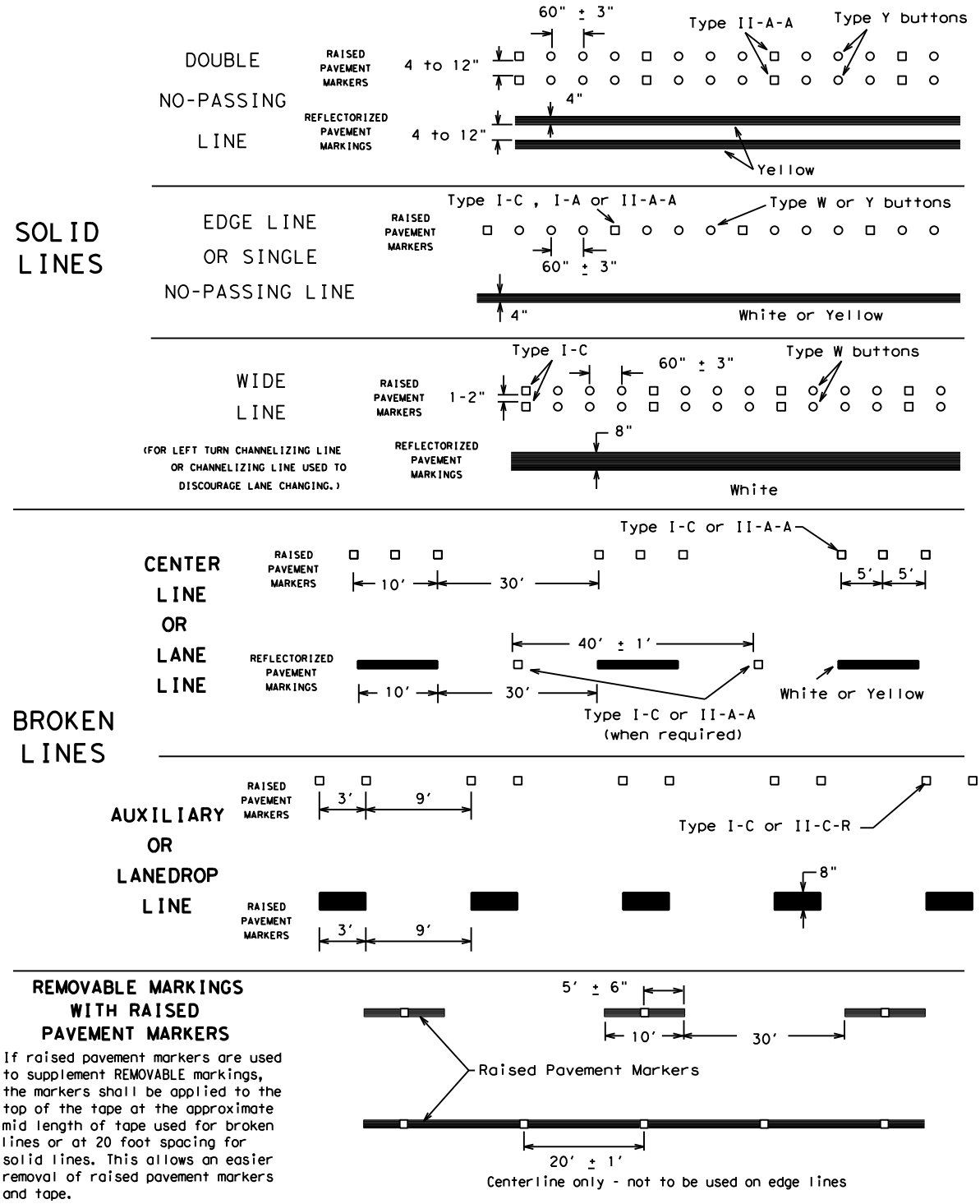

Raised pavement markers used as standard pavement markings shall be from the approved products list and meet the requirements of Item 672 "RAISED PAVEMENT MARKERS."

DISCLAIMER:
The use of this standard is governed by the "Texas Engineering Practice Act". No warranty of any kind is made by TxDOT for any purpose whatsoever. TxDOT assumes no responsibility for the conversion of this standard to other formats or for incorrect results or damages resulting from its use.

Texas Department of Transportation

Traffic Operations Division Standard

BARRICADE AND CONSTRUCTION PAVEMENT MARKING PATTERNS

BC(12)-14

FILE: bcsm-14.dgn	DN: TxDOT	CK: TxDOT	DW: TxDOT	CK: TxDOT
© TxDOT February 1998	CONT	SECT	JOB	HIGHWAY
REVISIONS				
1-97 11-02 7-13	DIST		COUNTY	SHEET NO.
2-98 9-07 8-14				

DATE:
FILE: Revised Addendum 02 Concrete Parking Lot